TROY-BILT®

OPERATOR'S MANUAL

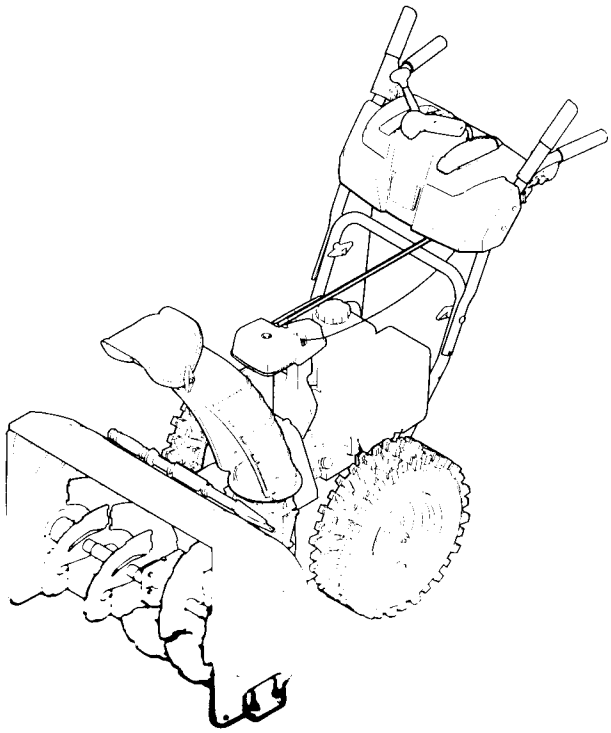

Two-Stage Snow Thrower — Storm 2620

⚠ WARNING

READ AND FOLLOW ALL SAFETY RULES AND INSTRUCTIONS IN THIS MANUAL BEFORE ATTEMPTING TO OPERATE THIS MACHINE. FAILURE TO COMPLY WITH THESE INSTRUCTIONS MAY RESULT IN PERSONAL INJURY.

TROY-BILT LLC, P.O. BOX 361131 CLEVELAND, OHIO 44136-0019

Printed In USA

Form No. 769-05013A
(August 5, 2009)

To The Owner

1

Thank You

Thank you for purchasing a Snow Thrower manufactured by Troy-Bilt LLC. It was carefully engineered to provide excellent performance when properly operated and maintained.

Please read this entire manual prior to operating the equipment. It instructs you how to safely and easily set up, operate and maintain your machine. Please be sure that you, and any other persons who will operate the machine, carefully follow the recommended safety practices at all times. Failure to do so could result in personal injury or property damage.

All information in this manual is relative to the most recent product information available at the time of printing. Review this manual frequently to familiarize yourself with the machine, its features and operation. Please be aware that this Operator's Manual may cover a range of product specifications for various models. Characteristics and features discussed and/or illustrated in this manual may not be applicable to all models. Troy-Bilt LLC reserves the right to change product specifications, designs and equipment without notice and without incurring obligation.

If you have any problems or questions concerning the machine phone a authorized Troy-Bilt service dealer or contact us direct. Troy-Bilt's Customer Support telephone numbers, website address and mailing address can be found on this page. We want to ensure your complete satisfaction at all times.

Throughout this manual, all references to *right* and *left* side of the machine are observed from the operating position

Table of Contents

Safe Operation Practices 3
Assembly & Set-Up 7
Controls 12
Operation 15
Maintenance & Adjustment 17
Engine Maintenance 20
Service 22
Troubleshooting 26
Replacement Parts 27
Warranty ..... *Back Cover*

Record Product Information

Before setting up and operating your new equipment, please locate the model plate on the equipment and record the information in the provided area to the right. You can locate the model plate by standing at the operator's position and looking at the lower, rear section of the frame. This information will be necessary, should you seek technical support via our web site, Customer Support Department, or with a local authorized service dealer.

MODEL NUMBER

SERIAL NUMBER

Customer Support

Please do NOT return the machine to the retailer or dealer without first contacting our Customer Support Department.

If you have difficulty assembling this product or have any questions regarding the controls, operation, or maintenance of this machine, you can seek help from the experts. Choose from the options below:

◊ Visit us on the web at www.troybilt.com

◊ Call a Customer Support Representative at (800) 828-5500 or (330) 558-7220

◊ Write us at Troy-Bilt LLC • P.O. Box 361131 • Cleveland, OH • 44136-0019

Important Safe Operation Practices

2

WARNING! This symbol points out important safety instructions which, if not followed, could endanger the personal safety and/or property of yourself and others. Read and follow all instructions in this manual before attempting to operate this machine. Failure to comply with these instructions may result in personal injury.
When you see this symbol. **HEED ITS WARNING!**

CALIFORNIA PROPOSITION 65

WARNING! Engine Exhaust, some of its constituents, and certain vehicle components contain or emit chemicals known to State of California to cause cancer and birth defects or other reproductive harm.

DANGER: This machine was built to be operated according to the safe operation practices in this manual. As with any type of power equipment, carelessness or error on the part of the operator can result in serious injury. This machine is capable of amputating fingers, hands, toes and feet and throwing foreign objects. Failure to observe the following safety instructions could result in serious injury or death.

Training

1. Read, understand, and follow all instructions on the machine and in the manual(s) before attempting to assemble and operate. Keep this manual in a safe place for future and regular reference and for ordering replacement parts.
2. Be familiar with all controls and their proper operation. Know how to stop the machine and disengage them quickly.
3. Never allow children under 14 years of age to operate this machine. Children 14 and over should read and understand the instructions and safe operation practices in this manual and on the machine and be trained and supervised by an adult.
4. Never allow adults to operate this machine without proper instruction.
5. Thrown objects can cause serious personal injury. Plan your snow-throwing pattern to avoid discharge of material toward roads, bystanders and the like.
6. Keep bystanders, pets and children at least 75 feet from the machine while it is in operation. Stop machine if anyone enters the area.
7. Exercise caution to avoid slipping or falling, especially when operating in reverse.

Preparation

Thoroughly inspect the area where the equipment is to be used. Remove all doormats, newspapers, sleds, boards, wires and other foreign objects, which could be tripped over or thrown by the auger/impeller.

1. Always wear safety glasses or eye shields during operation and while performing an adjustment or repair to protect your eyes. Thrown objects which ricochet can cause serious injury to the eyes.
2. Do not operate without wearing adequate winter outer garments. Do not wear jewelry, long scarves or other loose clothing, which could become entangled in moving parts. Wear footwear which will improve footing on slippery surfaces.
3. Use a grounded three-wire extension cord and receptacle for all machines with electric start engines.
4. Adjust collector housing height to clear gravel or crushed rock surfaces.
5. Disengage all control levers before starting the engine.
6. Never attempt to make any adjustments while engine is running, except where specifically recommended in the operator's manual.
7. Let engine and machine adjust to outdoor temperature before starting to clear snow.

Safe Handling of Gasoline

To avoid personal injury or property damage use extreme care in handling gasoline. Gasoline is extremely flammable and the vapors are explosive. Serious personal injury can occur when gasoline is spilled on yourself or your clothes which can ignite. Wash your skin and change clothes immediately.

a. Use only an approved gasoline container.

b. Extinguish all cigarettes, cigars, pipes and other sources of ignition.

c. Never fuel machine indoors.

d. Never remove gas cap or add fuel while the engine is hot or running.

e. Allow engine to cool at least two minutes before refueling.

f. Never over fill fuel tank. Fill tank to no more than ½ inch below bottom of filler neck to provide space for fuel expansion.

g. Replace gasoline cap and tighten securely.

h. If gasoline is spilled, wipe it off the engine and equipment. Move machine to another area. Wait 5 minutes before starting the engine.

i. Never store the machine or fuel container inside where there is an open flame, spark or pilot light (e.g. furnace, water heater, space heater, clothes dryer etc.).

j. Allow machine to cool at least 5 minutes before storing.

k. Never fill containers inside a vehicle or on a truck or trailer bed with a plastic liner. Always place containers on the ground away from your vehicle before filling.

l. If possible, remove gas-powered equipment from the truck or trailer and refuel it on the ground. If this is not possible, then refuel such equipment on a trailer with a portable container, rather than from a gasoline dispenser nozzle.

m. Keep the nozzle in contact with the rim of the fuel tank or container opening at all times until fueling is complete. Do not use a nozzle lock-open device.

Operation

1. Do not put hands or feet near rotating parts, in the auger/impeller housing or chute assembly. Contact with the rotating parts can amputate hands and feet.

2. The auger/impeller control lever is a safety device. Never bypass its operation. Doing so makes the machine unsafe and may cause personal injury.

3. The control levers must operate easily in both directions and automatically return to the disengaged position when released.

4. Never operate with a missing or damaged chute assembly. Keep all safety devices in place and working.

5. Never run an engine indoors or in a poorly ventilated area. Engine exhaust contains carbon monoxide, an odorless and deadly gas.

6. Do not operate machine while under the influence of alcohol or drugs.

7. Muffler and engine become hot and can cause a burn. Do not touch. Keep children away.

8. Exercise extreme caution when operating on or crossing gravel surfaces. Stay alert for hidden hazards or traffic.

9. Exercise caution when changing direction and while operating on slopes.

10. Plan your snow-throwing pattern to avoid discharge towards windows, walls, cars etc. Thus, avoiding possible property damage or personal injury caused by a ricochet.

11. Never direct discharge at children, bystanders and pets or allow anyone in front of the machine.

12. Do not overload machine capacity by attempting to clear snow at too fast of a rate.

13. Never operate this machine without good visibility or light. Always be sure of your footing and keep a firm hold on the handles. Walk, never run.

14. Disengage power to the auger/impeller when transporting or not in use.

15. Never operate machine at high transport speeds on slippery surfaces. Look down and behind and use care when backing up.

16. If the machine should start to vibrate abnormally, stop the engine, disconnect the spark plug wire and ground it against the engine. Inspect thoroughly for damage. Repair any damage before starting and operating.

17. Disengage all control levers and stop engine before you leave the operating position (behind the handles). Wait until the auger/impeller comes to a complete stop before unclogging the chute assembly, making any adjustments or inspections.

18. Never put your hand in the discharge or collector openings. Always use the clean-out tool provided to unclog the discharge opening. Do not unclog chute assembly while engine is running. Shut off engine and remain behind handles until all moving parts have stopped before unclogging.

19. Use only attachments and accessories approved by the manufacturer (e.g. wheel weights, tire chains, cabs etc.

20. When starting engine, pull cord slowly until resistance is felt, then pull rapidly. Rapid retraction of starter cord (kickback) will pull hand and arm toward engine faster than you can let go. Broken bones, fractures, bruises or sprains could result.

21. If situations occur which are not covered in this manual, use care and good judgment. Contact Customer Support for assistance and the name of your nearest servicing dealer.

Clearing a Clogged Discharge Chute

Hand contact with the rotating impeller inside the discharge chute is the most common cause of injury associated with snow throwers. Never use your hand to clean out the discharge chute.

To clear the chute:

1. SHUT THE ENGINE OFF!
2. Wait 10 seconds to be sure the impeller blades have stopped rotating.
3. Always use a clean-out tool, not your hands.

Maintenance & Storage

1. Never tamper with safety devices. Check their proper operation regularly. Refer to the maintenance and adjustment sections of this manual.
2. Before cleaning, repairing, or inspecting machine disengage all control levers and stop the engine. Wait until the auger/impeller come to a complete stop. Disconnect the spark plug wire and ground against the engine to prevent unintended starting.
3. Check bolts and screws for proper tightness at frequent intervals to keep the machine in safe working condition. Also, visually inspect machine for any damage.
4. Do not change the engine governor setting or over-speed the engine. The governor controls the maximum safe operating speed of the engine.
5. Snow thrower shave plates and skid shoes are subject to wear and damage. For your safety protection, frequently check all components and replace with original equipment manufacturer's (OEM) parts only. "Use of parts which do not meet the original equipment specifications may lead to improper performance and compromise safety!"
6. Check control levers periodically to verify they engage and disengage properly and adjust, if necessary. Refer to the adjustment section in this operator's manual for instructions.
7. Maintain or replace safety and instruction labels, as necessary.
8. Observe proper disposal laws and regulations for gas, oil, etc. to protect the environment.
9. Prior to storing, run machine a few minutes to clear snow from machine and prevent freeze up of auger/impeller.
10. Never store the machine or fuel container inside where there is an open flame, spark or pilot light such as a water heater, furnace, clothes dryer etc.
11. Always refer to the operator's manual for proper instructions on off-season storage.
12. Check fuel line, tank, cap, and fittings frequently for cracks or leaks. Replace if necessary.
13. Do not crank engine with spark plug removed.
14. According to the Consumer Products Safety Commission (CPSC) and the U.S. Environmental Protection Agency (EPA), this product has an *Average Useful Life* of seven (7) years, or 60 hours of operation. At the end of the *Average Useful Life* have the machine inspected annually by an authorized service dealer to ensure that all mechanical and safety systems are working properly and not worn excessively. Failure to do so can result in accidents, injuries or death.

Do not modify engine

To avoid serious injury or death, do not modify engine in any way. Tampering with the governor setting can lead to a runaway engine and cause it to operate at unsafe speeds. Never tamper with factory setting of engine governor.

Notice Regarding Emissions

Engines which are certified to comply with California and federal EPA emission regulations for SORE (Small Off Road Equipment) are certified to operate on regular unleaded gasoline, and may include the following emission control systems: Engine Modification (EM), Oxidizing Catalyst (OC), Secondary Air Injection (SAI) and Three Way Catalyst (TWC) if so equipped.

Spark Arrestor

WARNING! This machine is equipped with an internal combustion engine and should not be used on or near any unimproved forest-covered, brush covered or grass-covered land unless the engine's exhaust system is equipped with a spark arrester meeting applicable local or state laws (if any).

If a spark arrester is used, it should be maintained in effective working order by the operator. In the State of California the above is required by law (Section 4442 of the California Public Resources Code). Other states may have similar laws. Federal laws apply on federal lands.
A spark arrester for the muffler is available through your nearest engine authorized service dealer or contact the service department, P.O. Box 361131 Cleveland, Ohio 44136-0019.

Safety Symbols

This page depicts and describes safety symbols that may appear on this product. Read, understand, and follow all instructions on the machine before attempting to assemble and operate.

Symbol	Description
	READ THE OPERATOR'S MANUAL(S) Read, understand, and follow all instructions in the manual s before attempting to assemble and operate
	WARNING— ROTATING BLADES Keep hands out of inlet and discharge openings while machine is running. There are rotating blades inside
	WARNING— ROTATING BLADES Keep hands out of inlet and discharge openings while machine is running. There are rotating blades inside
	WARNING— ROTATING AUGER Do not put hands or feet near rotating parts, in the auger/impeller housing or chute assembly. Contact with the rotating parts can amputate hands and feet.
	WARNING—THROWN OBJECTS This machine may pick up and throw and objects which can cause serious personal injury.
	WARNING—GASOLINE IS FLAMMABLE Allow the engine to cool at least two minutes before refueling.
	WARNING— CARBON MONOXIDE Never run an engine indoors or in a poorly ventilated area. Engine exhaust contains carbon monoxide, an odorless and deadly gas.
	WARNING— ELECTRICAL SHOCK Do not use the engine's electric starter in the rain
	WARNING— HOT SURFACE Engine parts, especially the muffler, become extremely hot during operation. Allow engine and muffler to cool before touching.

WARNING! Your Responsibility—Restrict the use of this power machine to persons who read, understand and follow the warnings and instructions in this manual and on the machine.

SAVE THESE INSTRUCTIONS!

Assembly & Set-Up

3

Contents of Carton

- One Snow Thrower
- One Snow Thrower Operator's Manual
- Two Replacement Auger Shear Pins
- Hex Rod
- One Product Registration Card
- Chute Assembly

Assembly

Remove all loose parts before assembling.

Handle Assembly

1. Place the shift lever in the Forward-6 position
2. Observe the lower rear area of the snow thrower to be sure both cables are aligned with roller guides before pivoting the handle upward. Pivot the handle upward. See Fig. 3-1.

   NOTE: Make certain the upper ends of each cable are seated properly in its bracket.

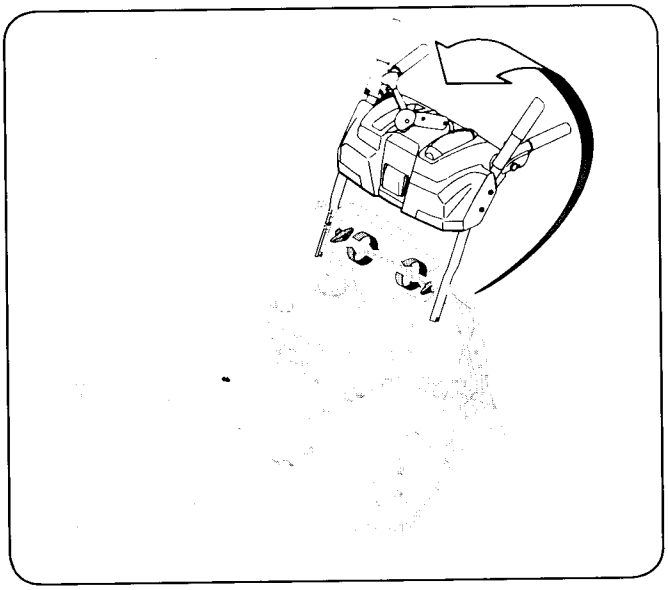

Figure 3-1

3. Secure the handle by tightening the plastic knob located on both the left and right sides of the handle. Remove and discard any rubber bands, if present. They are for packaging purposes only.

Chute Assembly

1. Remove cotter pin, wing nut and hex screw from chute control head and clevis pin and bow-tie cotter pin from chute support bracket. See Fig. 3-2.
2. Insert hex rod into chute control head. Push rod as far into chute control head as possible, keeping the holes in the hex rod pointing upward. See Fig. 3-3.

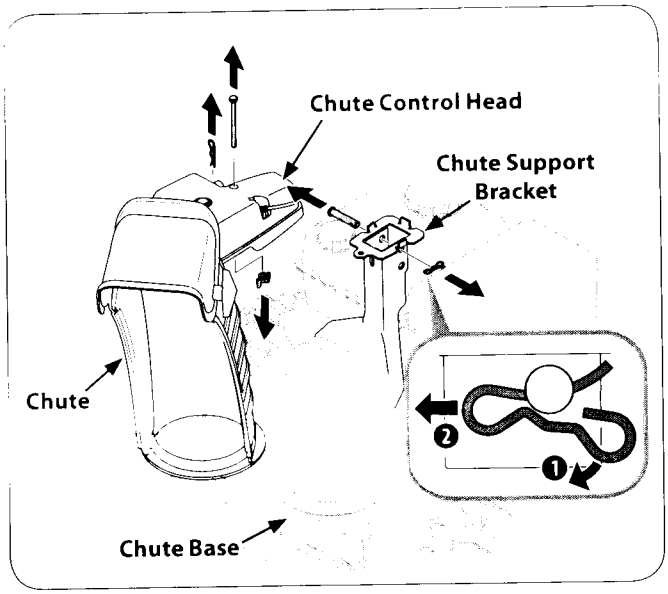

Figure 3-2

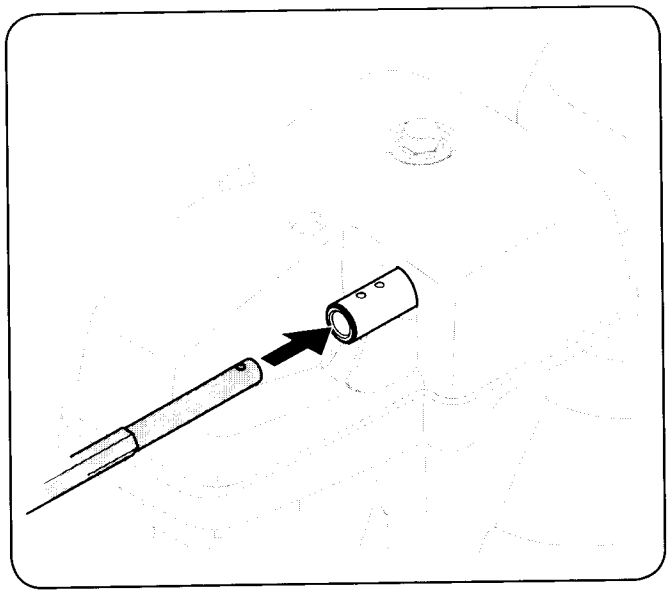

Figure 3-3

3. Place chute onto chute base and ensure hex rod is positioned under the handle panel. Install hex bolt previously removed but do not secure with wing nut at this time. See Fig. 3-4.

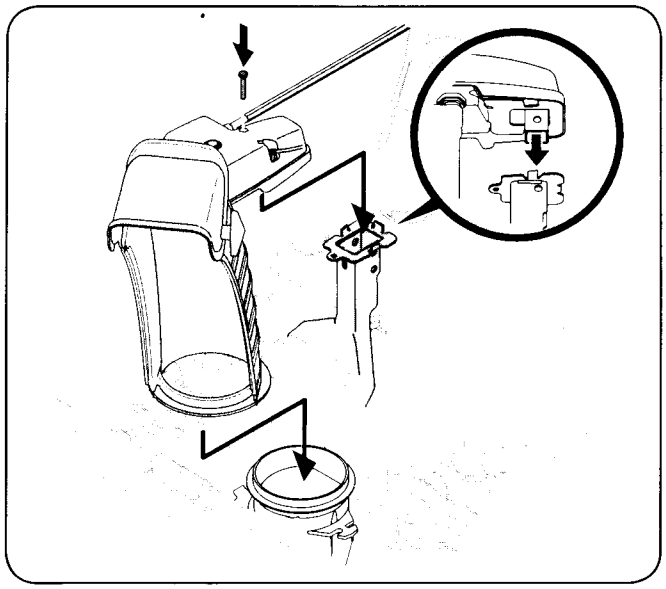

Figure 3-4

4. Squeeze the trigger on the joystick and rotate the chute by hand to face forward. The holes in the chute control input will be facing up. See Fig. 3-5.

   Note: The chute will not rotate without squeezing the trigger on the joystick.

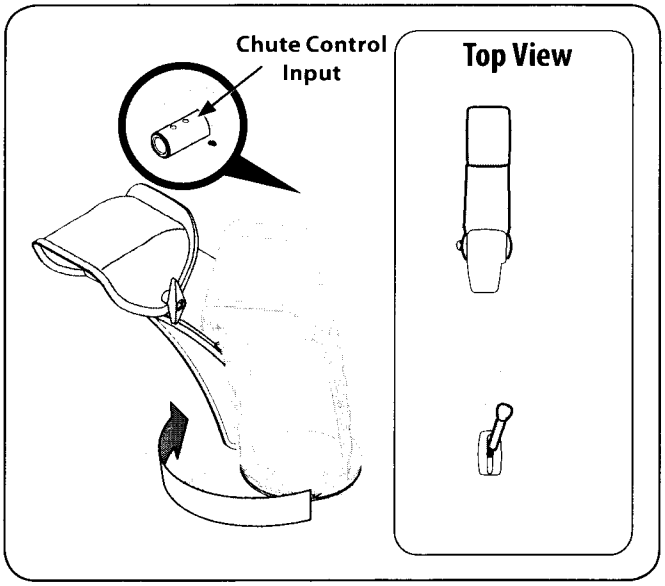

Figure 3-5

5. Rotate the joystick to the one o'clock position so that the silver indicator arrow on the pinion gear below the control panel faces upward. See Fig. 3-6.

   Note: The joystick will be angled slightly to the right.

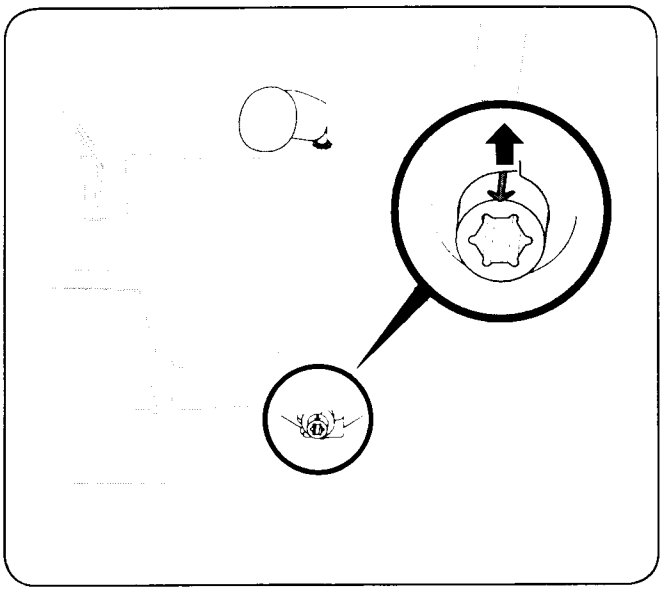

Figure 3-6

6. Insert the hex rod into the pinion gear below the joystick. Make sure to line up the hole in the hex rod with the arrow on the pinion gear. See Fig. 3-7.

   Note: The hex rod will fit snuggly into the pinion gear. Support the rear of the dash panel with one hand while inserting the hex rod with your other hand to ensure the hex rod is inserted ***all the way*** into the pinion gear.

   Note: The hole is a reference for aligning the rod with the indicator arrow on the pinion gear.

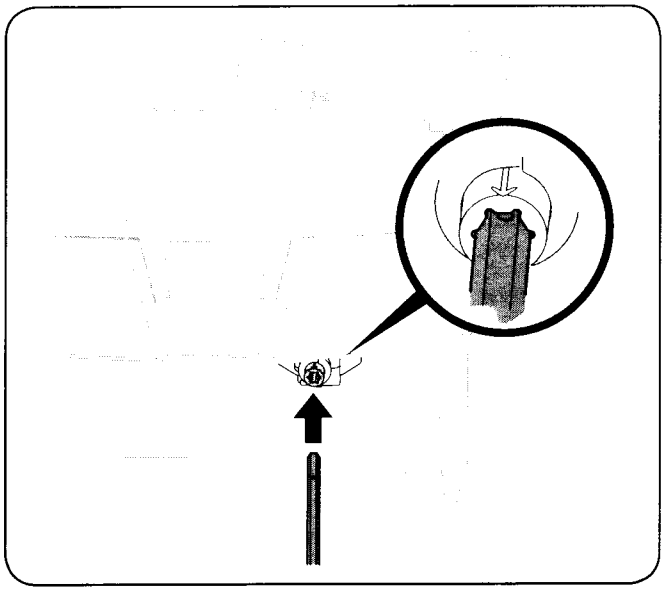

Figure 3-7

7. Push the hex rod toward the control panel until the hole in the hex rod lines up with the hole in the chute control input closest to the chute control head and insert the cotter pin. See Fig. 3-8.

   Note: The second hole is used to achieve further engagement of the hex rod into the pinion gear if required. Refer to page 19 for Chute Control Rod adjustments.

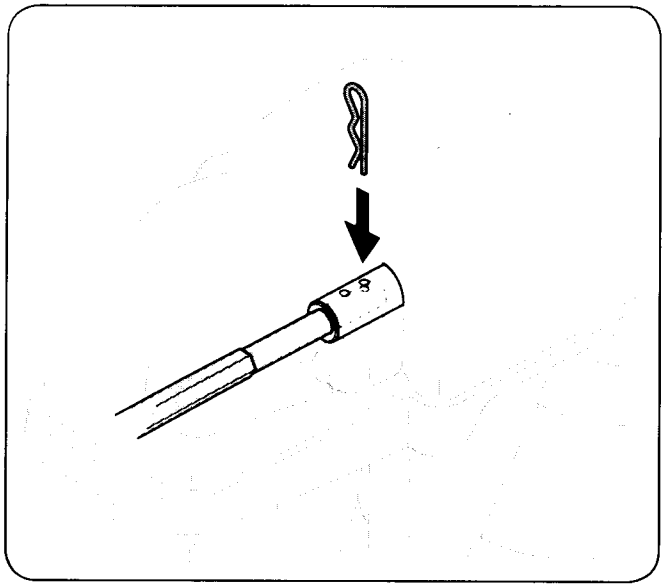

Figure 3-8

8. Finish securing chute control head to chute support bracket with wing nut, clevis pin, and bow-tie cotter pin removed in step 1. See Fig. 3-2.

Set-Up

Shear Pins

A pair of replacement auger shear pins and bow tie cotter pins are included with your snow thrower. Store them in your snow thrower's control panel until needed. See Fig. 3-9.

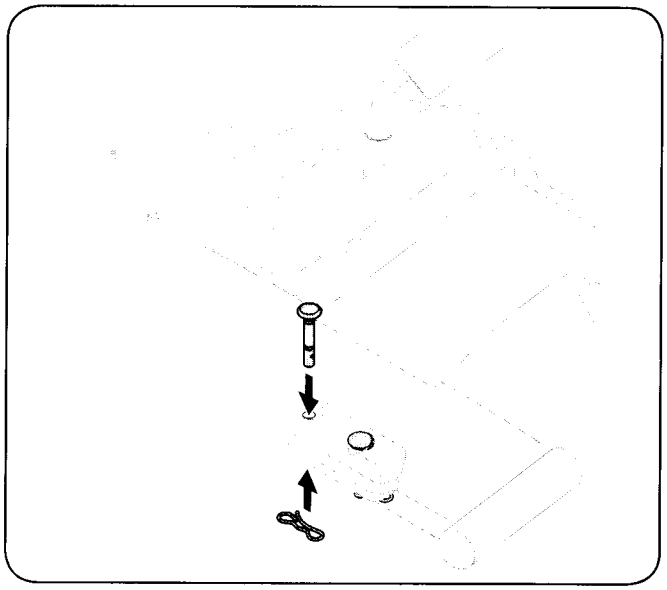

Figure 3-9

Tire Pressure

WARNING: Under any circumstance do not exceed manufacturer's recommended psi. Equal tire pressure should be maintained at all times. Excessive pressure when seating beads may cause tire/rim assembly to burst with force sufficient to cause serious injury. Refer to sidewall of tire for recommended pressure.

The tires are over-inflated for shipping purposes. Check the tire pressure before operating the snow thrower. Refer to the tire side wall for tire manufacturer's recommended psi and deflate (or inflate) the tires as necessary.

Note: Equal tire pressure is to be maintained at all times for performance purposes.

Chute Clean-Out Tool

The chute clean-out tool is fastened to the top of the auger housing with a mounting clip and a cable tie at the factory. Cut the cable tie before operating the snow thrower. See Fig. 3-10.

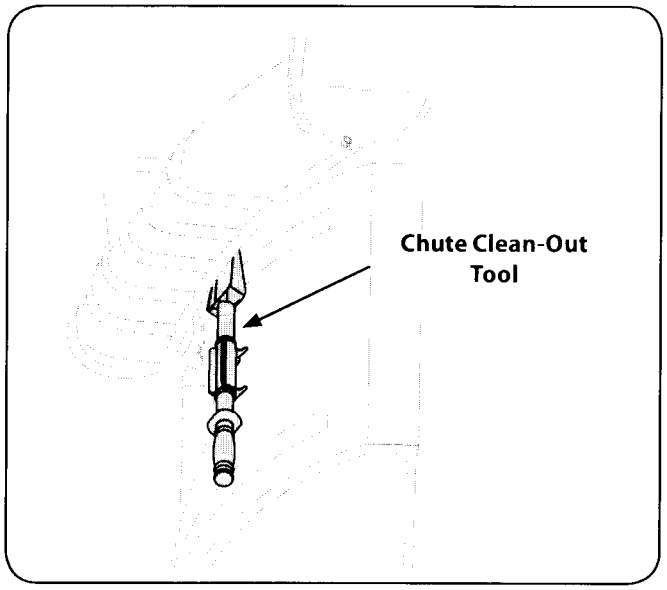

Figure 3-10

Fuel Recommendations

Use automotive gasoline (unleaded or low leaded to minimize combustion chamber deposits) with a minimum of 87 octane. Gasoline with up to 10% ethanol or 15% MTBE (Methyl Tertiary Butyl Ether) can be used. Never use an oil/gasoline mixture or dirty gasoline. Avoid getting dirt, dust, or water in the fuel tank. DO NOT use E85 gasoline.

- Refuel in a well-ventilated area with the engine stopped. Do not smoke or allow flames or sparks in the area where the engine is refueled or where gasoline is stored.
- Do not overfill the fuel tank. After refueling, make sure the tank cap is closed properly and securely.
- Be careful not to spill fuel when refueling. Spilled fuel or fuel vapor may ignite. If any fuel is spilled, make sure the area is dry before starting the engine.
- Avoid repeated or prolonged contact with skin or breathing of vapor.

Adding Fuel

WARNING! Use extreme care when handling gasoline. Gasoline is extremely flammable and the vapors are explosive. Never fuel the machine indoors or while the engine is hot or running. Extinguish cigarettes, cigars, pipes and other sources of ignition.

WARNING! Always keep hands and feet clear of equipment moving parts. Do not use a pressurized starting fluid. Vapors are flammable.

1. Clean around fuel fill before removing cap to fuel.
2. A fuel level indicator is located in the fuel tank. Fill tank until fuel reaches the fuel level indictor, Fig. 3-11. Be careful not to overfill.

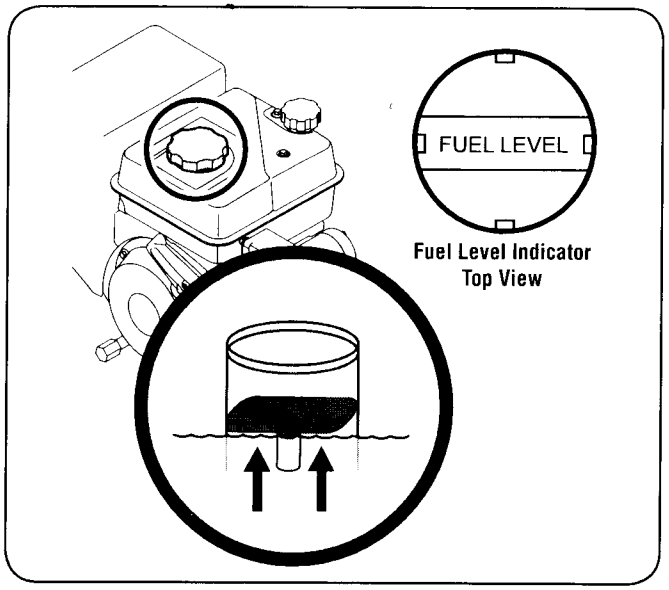

Figure 3-11

Checking Oil Level

CAUTION: The engine is shipped with oil in the engine. You must, however, check the oil level prior to operating the snow thrower. Running the engine with insufficient oil can cause serious engine damage and void the engine warranty.

NOTE: Be sure to check the engine on a level surface with the engine stopped.

1. Remove the oil filler cap/dipstick and wipe the dipstick clean. See Fig. 3-12.

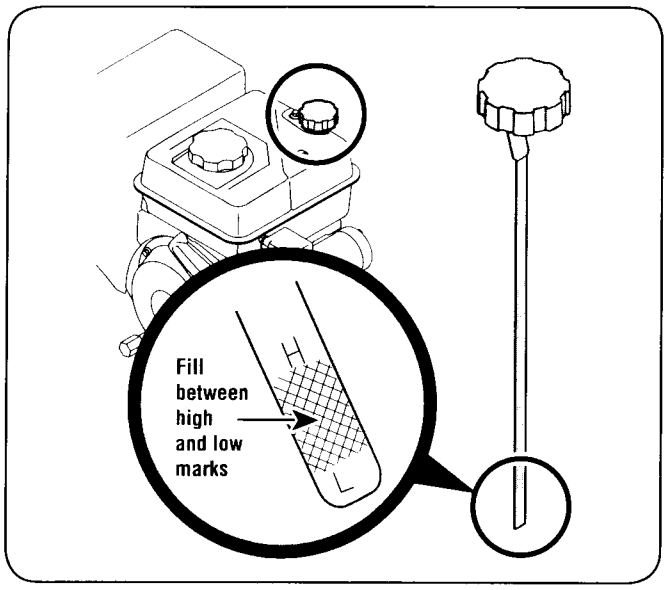

Figure 3-12

2. Insert the cap/dipstick into the oil filler neck, **but do *not* screw it in**.
3. Remove the oil filler cap/dipstick. If the level is low, slowly add oil until oil level registers between high (H) and low (L), Fig. 3-13. Refer to the Engine Maintenance section for correct oil viscosity and engine oil capacity.

   NOTE: Do not overfill. Overfilling with oil may result in engine smoking, hard starting or spark plug fouling.
4. Replace and tighten cap/dipstick firmly before starting engine.

Adjustments

Auger Control

WARNING! Prior to operating your snow thrower, carefully read and follow all instructions below. Perform all adjustments to verify your snow thrower is operating safely and properly.

Check the adjustment of the auger control as follows:

1. When the auger control is released and in the disengaged "up" position, the cable should have very little slack. It should NOT be tight.
2. In a well-ventilated area, start the snow thrower engine. Refer to Starting the Engine on page 15. Make sure the throttle is set in the FAST position.

3. While standing in the operator's position (behind the snow thrower) engage the auger.
4. Allow the auger to remain engaged for approximately ten (10) seconds before releasing the auger control. Repeat this several times.
5. With the throttle control in the FAST (rabbit) position and the auger control in the disengaged "up" position, walk to the front of the machine.
6. Confirm that the auger has completely stopped rotating and shows NO signs of motion. If the auger shows ANY signs of rotating, immediately return to the operator's position and shut off the engine. Wait for ALL moving parts to stop before readjusting the auger control.
7. To readjust the control cable, loosen the upper hex nut on the auger cable bracket. Position the bracket upward to provide more slack (or downward to increase cable tension). See Fig. 3-13.

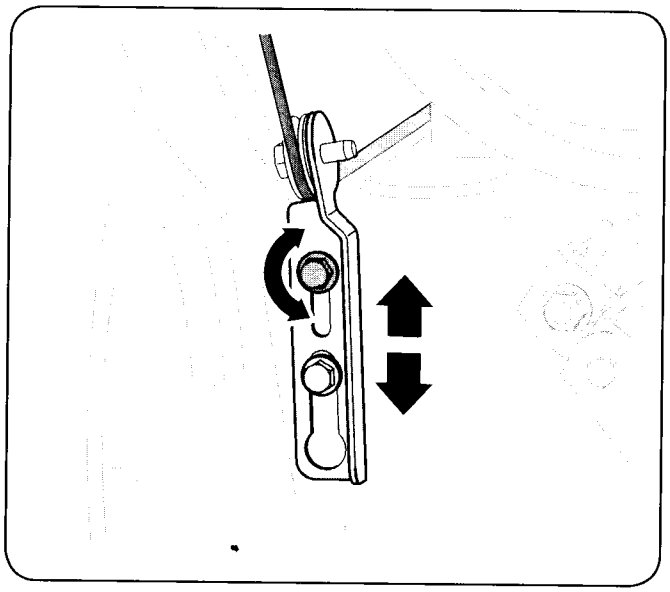

Figure 3-13

8. Retighten the upper hex nut.
9. Repeat steps 2-6 above to verify proper adjustment has been achieved.

Skid Shoes

The snow thrower skid shoes are adjusted upward at the factory for shipping purposes. Adjust them downward, if desired, prior to operating the snow thrower.

CAUTION: It is not recommended that you operate this snow thrower on gravel as it can easily pick up and throw loose gravel, causing personal injury or damage to the snow thrower and surrounding property.

- For close snow removal on a smooth surface, raise skid shoes higher on the auger housing.
- Use a middle or lower position when the area to be cleared is uneven, such as a gravel driveway

NOTE: If you choose to operate the snow thrower on a gravel surface, keep the skid shoes in position for maximum clearance between the ground and the shave plate.

To adjust the skid shoes:

1. Loosen the four hex nuts (two on each side) and carriage bolts. Move skid shoes to desired position. See Fig. 3-14.

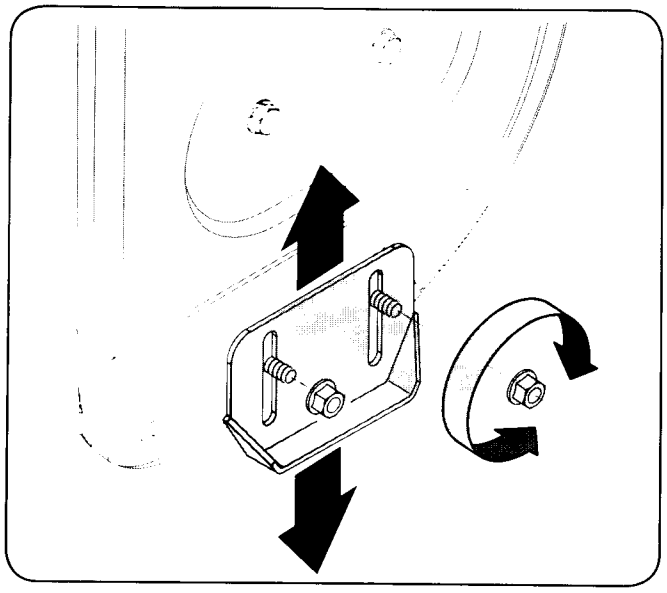

Figure 3-14

2. Make certain the entire bottom surface of skid shoe is against the ground to avoid uneven wear on the skid shoes.
3. Retighten nuts and bolts securely.

Chute Assembly

The distance snow is thrown can be adjusted by changing the angle of the chute assembly. To do so:

1. Stop the engine and remove the key
2. Loosen the plastic knob found on the left side of the chute assembly.
3. Pivot the chute upward or downward before retightening the wing knob. See Fig. 3-15.

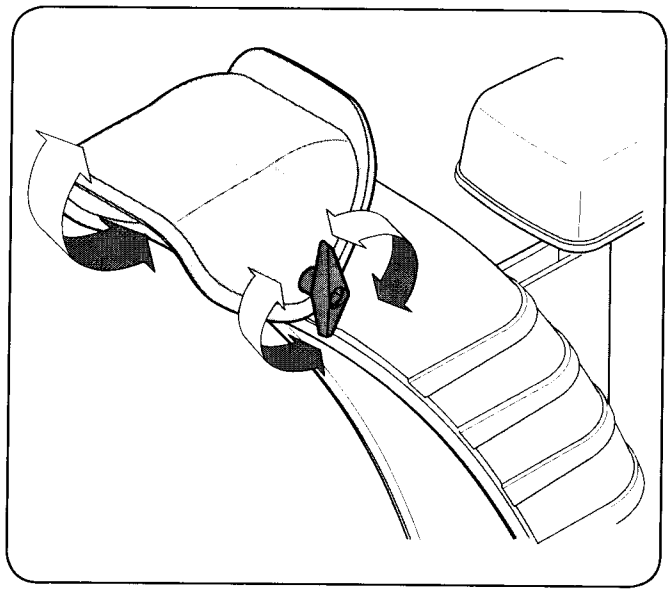

Figure 3-15

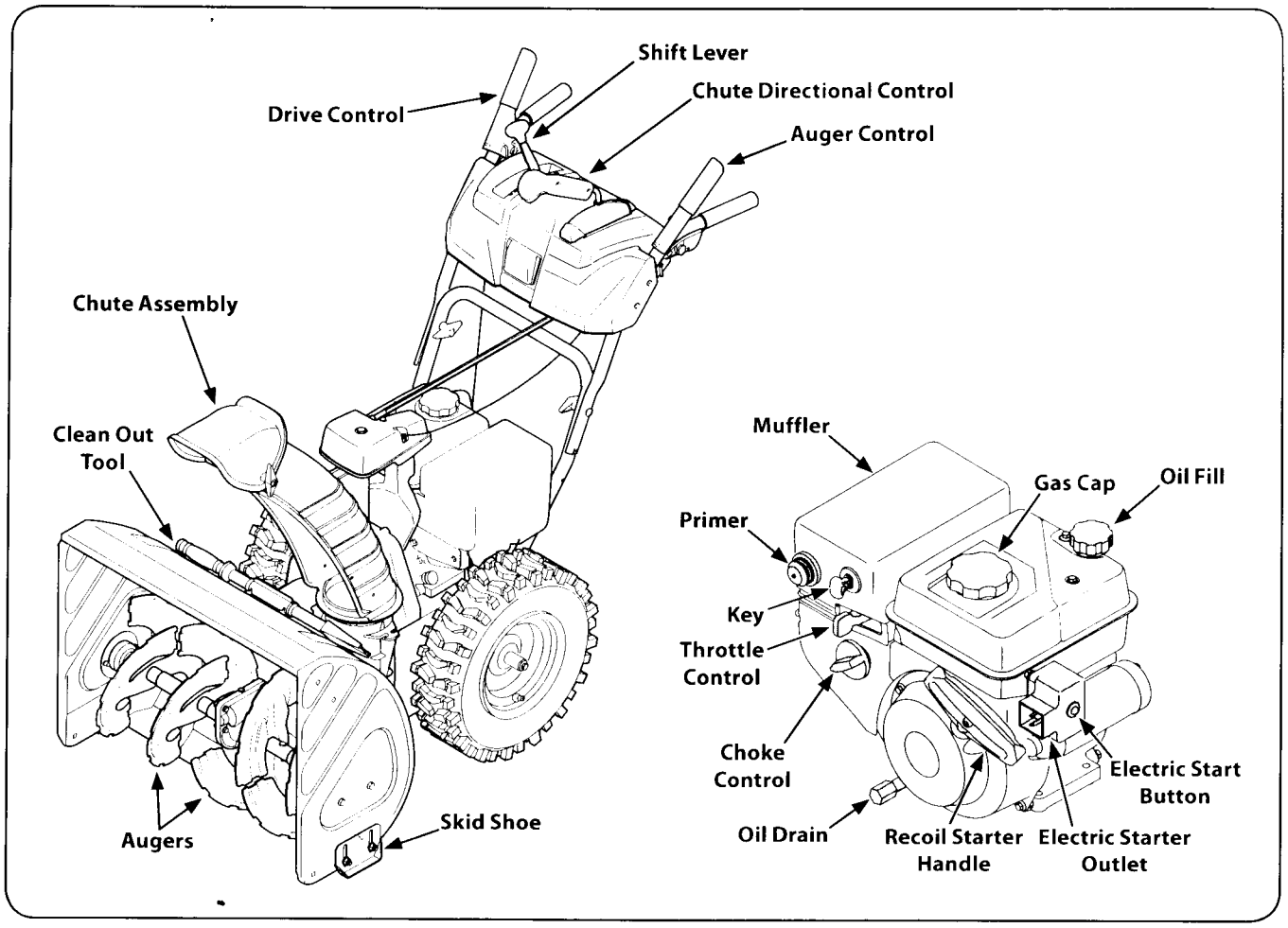

Figure 4-1

Snow thrower controls and features are described below and illustrated in Fig. 4-1.

Shift Lever

The shift lever is located in the right side of the handle panel and is used to determine ground speed and direction of travel.

Forward

There are six forward (F) speeds. Position one (1) is the slowest and position six (6) is the fastest.

Reverse

There are two reverse (R) speeds. One (1) is the slower and two (2) is the faster.

Choke Control

The choke control is found on the rear of the engine and is activated by rotating the knob counter-clockwise. Activating the choke control closes the choke plate on the carburetor and aids in starting the engine.

Key

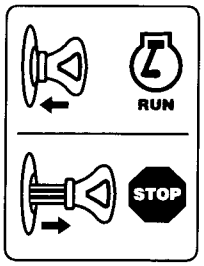

The key is a safety device. It must be fully inserted in order for the engine to start. Remove the key when the snow thrower is not in use.

Note: Do not turn the key in an attempt to start the engine. Doing so may cause it to break.

Throttle Control

The throttle control is located on the rear of the engine. It regulates the speed of the engine and will shut off the engine when moved into the STOP position.

Primer

Pressing the primer forces fuel directly into the engine's carburetor to aid in cold-weather starting.

Oil Fill

Engine oil level can be checked and oil added through the oil fill.

Oil Drain

Engine oil can be drained through the oil drain.

Muffler

Engine exhaust exits the engine via the muffler.

Skid Shoes

Position the skid shoes based on surface conditions. Adjust upward for hard-packed snow. Adjust downward when operating on gravel or crushed rock surfaces.

Electric Starter Outlet

Requires the use of a three-prong outdoor extension cord and a 120V power source/wall outlet.

Recoil Starter Handle

This handle is used to manually start the engine.

Electric Starter Button

Pressing the electric starter button engages the engine's electric starter when plugged into a 120V power source.

Augers

When engaged, the augers rotate and draw snow into the auger housing.

Chute Assembly

Snow drawn into the auger housing is discharged out the chute assembly.

Gas Cap

Unthread the gas cap to add gasoline to the fuel tank.

Auger Control

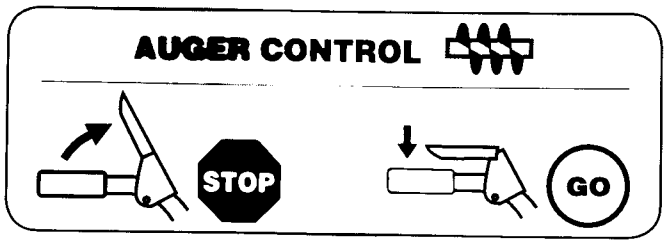

The auger control is located on the left handle. Squeeze the control grip against the handle to engage the augers and start snow throwing action. Release to stop.

Drive Control / Auger Clutch Lock

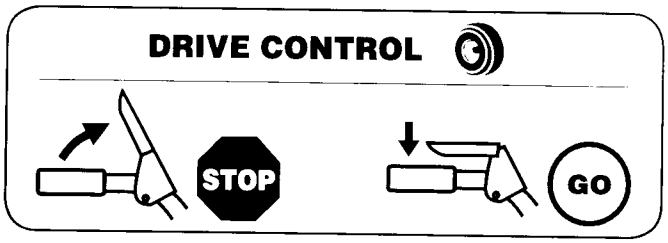

The drive control is located on the right handle. Squeeze the control grip against the handle to engage the wheel drive. Release to stop.

The drive control also locks the auger control so that you can operate the chute directional control without interrupting the snow throwing process. If the auger control is engaged simultaneously with the drive control, the operator can release the auger control (on the left handle) and the augers will remain engaged. Release both controls to stop the augers and wheel drive.

Note: Always release the drive control before changing speeds. Failure to do so will result in increased wear on your machine's drive system.

Chute Directional Control

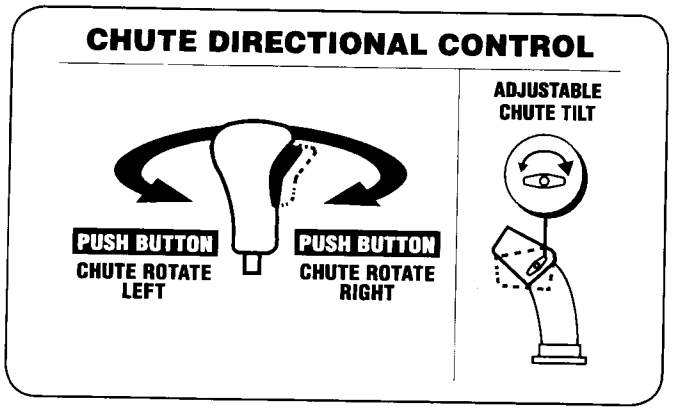

The chute directional control is located on the left side of the dash panel.

- To change the direction in which snow is thrown, squeeze the button on the joy-stick and pivot the joy-stick to the right or to the left.

Chute Clean-Out Tool

WARNING! Never use your hands to clear a clogged chute assembly. Shut off engine and remain behind handles until all moving parts have stopped before unclogging.

The chute clean-out tool is conveniently fastened to the rear of the auger housing with a mounting clip. Should snow and ice become lodged in the chute assembly during operation, proceed as follows to safely clean the chute assembly and chute opening:

1. Release both the Auger Control and the Drive Control.
2. Stop the engine and remove the key.
3. Remove the clean-out tool from the clip which secures it to the rear of the auger housing.
4. Use the shovel-shaped end of the clean-out tool to dislodge and scoop any snow and ice which has formed in and near the chute assembly.
5. Refasten the clean-out tool to the mounting clip on the rear of the auger housing, reinsert the key and start the snow thrower's engine.

While standing in the operator's position (behind the snow thrower), engage the auger control for a few seconds to clear any remaining snow and ice from the chute assembly.

Starting the Engine

WARNING! Always keep hands and feet clear of moving parts. Do not use a pressurized starting fluid. Vapors are flammable.

NOTE: Allow the engine to warm up for a few minutes after starting. The engine will not develop full power until it reaches operating temperatures.

Electric Starter

WARNING! The electric starter is equipped with a grounded three-wire power cord and plug, and is designed to operate on 120 volt AC household current. It must be used with a properly grounded three-prong receptacle at all times to avoid the possibility of electric shock. Follow all instructions carefully prior to operating the electric starter. DO NOT use electric starter in rain.

1. Determine that your home's wiring is a three-wire grounded system. Ask a licensed electrician if you are unsure. If you have a grounded three-prong receptacle, proceed as follows. If you do not have the proper house wiring, DO NOT use the electric starter under any conditions.
2. Insert key fully into slot, Fig. 5-1. Make sure it snaps into place. DO NOT turn key. The engine cannot start unless the key is inserted into ignition switch.

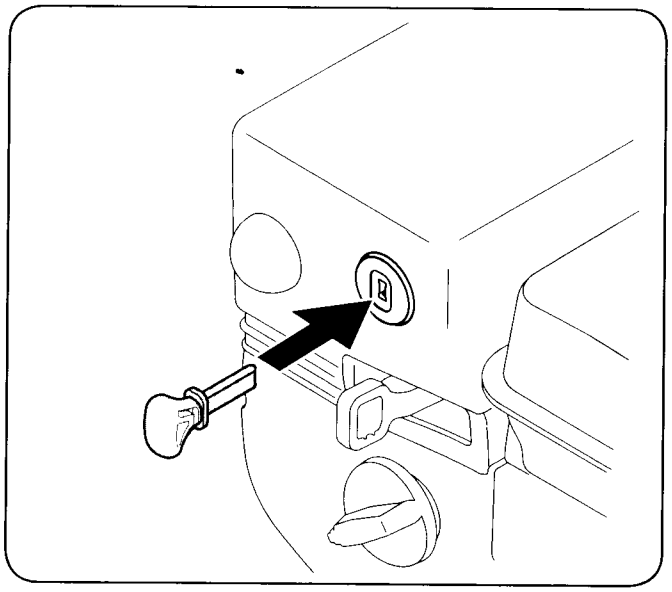

Figure 5-1

3. Plug the extension cord into the electric outlet located on the engine. Plug the other end of extension cord into a three-prong 120-volt, grounded, AC outlet in a well-ventilated area. See Fig. 5-2.

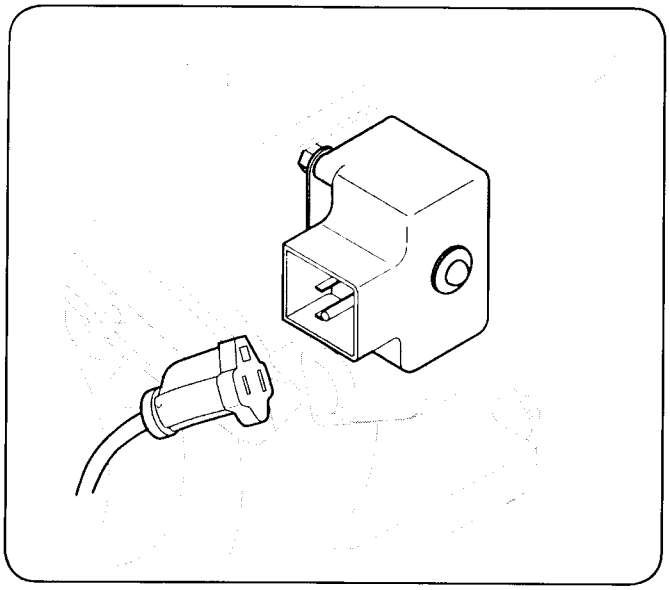

Figure 5-2

4. Move throttle control to FAST (rabbit) position.
5. Move choke to the CHOKE position (cold engine start). If engine is warm, place choke in RUN position.
6. Push primer three (3) times, making sure to cover vent hole when pushing. If engine is warm, push primer only once. Always cover vent hole when pushing. Cool weather may require priming to be repeated.
7. Push starter button to start engine. Once the engine starts, immediately release starter button. Electric starter is equipped with thermal overload protection; system will temporarily shut-down to allow starter to cool if electric starter becomes overloaded.
8. As the engine warms, slowly rotate the choke control to RUN position. If the engine falters, restart engine and run with choke at half-choke position for a short period of time, and then slowly rotate the choke into RUN position.
9. After engine is running, disconnect power cord from electric starter. When disconnecting, always unplug the end at the wall outlet before unplugging the opposite end from the engine.

Recoil Starter

CAUTION! Do not pull the starter handle with the engine running.

WARNING: To avoid unsupervised engine operation, never leave the engine unattended while running. Turn the engine off after use and remove key

1. Insert key fully into slot, Figure 5-1. Make sure it snaps into place. DO NOT turn key. The engine cannot start unless the key is inserted into ignition switch.
2. Move throttle control to FAST (rabbit) position.
3. Move choke to the CHOKE position (cold engine start). If engine is warm, place choke in RUN position.
4. Push primer three (3) times, making sure to cover vent hole when pushing. If engine is warm, push primer only once. Always cover vent hole when pushing. Cool weather may require priming to be repeated.
5. Pull gently on the starter handle until it begins to resist, then pull quickly and forcefully to overcome the compression. Do not release the handle and allow it to snap back. Return rope SLOWLY to original position. If required, repeat this step.
6. As the engine warms, slowly rotate the choke control to RUN position. If the engine falters, restart engine and run with choke at half-choke position for a short period of time, and then slowly rotate the choke into RUN position.

Stopping the Engine

WARNING: To avoid unsupervised engine operation, never leave the machine unattended with the engine running. Turn the engine off after use and remove key

Run engine for a few minutes before stopping to help dry off any moisture on the engine.

1. Move throttle control to STOP position.
2. Remove the key. Removing the key will reduce the possibility of unauthorized starting of the engine while equipment is not in use. Keep the key in a safe place. The engine cannot start without the key.
3. Wipe any moisture away from the controls on the engine.

To Engage Drive

1. With the throttle control in the Fast (rabbit) position move shift lever into one of the six forward (F) positions or two reverse (R) positions. Select a speed appropriate for the snow conditions and a pace you're comfortable with.
2. Squeeze the drive control against the handle to move the snow thrower. Release it and drive motion will stop.

To Engage Augers

To engage the augers and start throwing snow, squeeze the auger control against the left handle. Release to stop the augers.

Replacing Shear Pins

The augers are secured to the spiral shaft with two shear pins and bow-tie cotter pins. If the auger should strike a foreign object or ice jam, the snow thrower is designed so that the pins may shear. If the augers will not turn, check to see if the pins have sheared. See Fig. 5-3.

CAUTION: NEVER replace the auger shear pins with anything other than OEM Part No. 738-04124A replacement shear pins. Any damage to the auger gearbox or other components as a result of failing to do so will NOT be covered by your snow thrower's warranty.

WARNING! Always turn off the snow thrower's engine and remove the key prior to replacing shear pins.

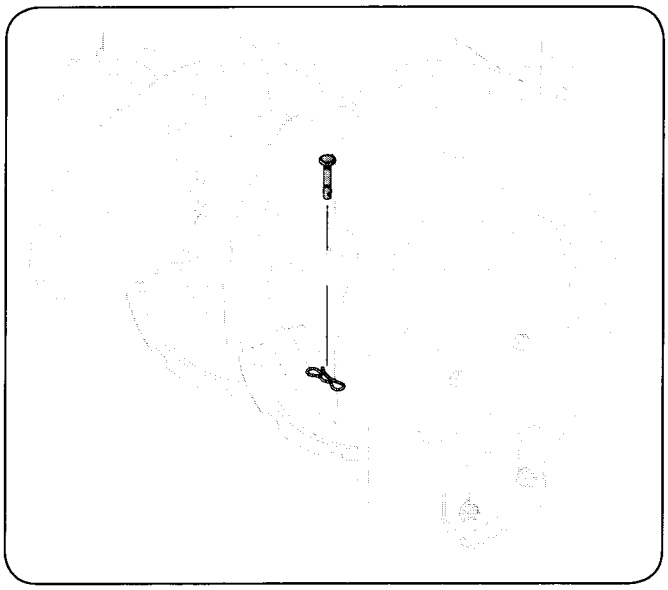

Figure 5-3

Maintenance

Engine

Refer to the Engine Maintenance section.

Shave Plate and Skid Shoes

The shave plate and skid shoes on the bottom of the snow thrower are subject to wear. They should be checked periodically and replaced when necessary.

To remove skid shoes:

1. Remove the four carriage bolts and hex flange nuts which secure them to the snow thrower.
2. Reassemble new skid shoes with the four carriage bolts (two on each side) and hex flange nuts. Refer to Fig. 6-1.

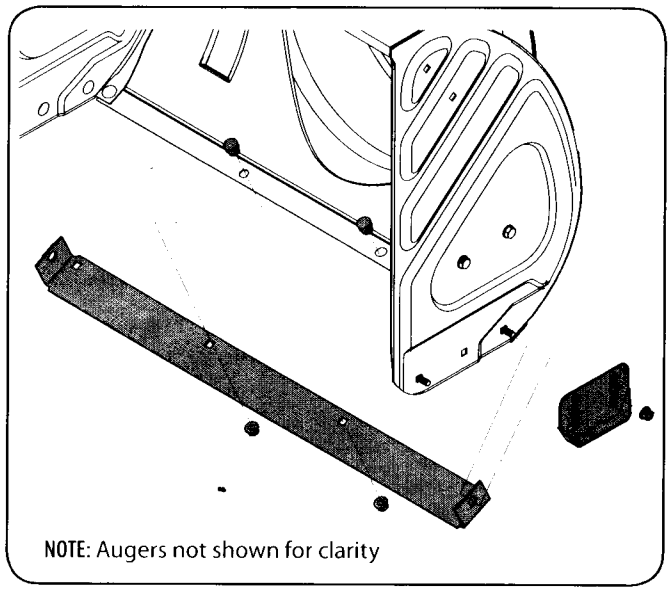

Figure 6-1

To remove shave plate:

3. Remove the carriage bolts and hex nuts which attach it to the snow thrower housing.
4. Reassemble new shave plate, making sure heads of carriage bolts are to the inside of housing. Tighten securely.

Tire Pressure

WARNING: Under any circumstance do not exceed manufacturer's recommended psi. Equal tire pressure should be maintained at all times. Excessive pressure when seating beads may cause tire/rim assembly to burst with force sufficient to cause serious injury. Refer to sidewall of tire for recommended pressure.

Check the tire pressure before operating the snow thrower. Refer to the tire side wall for tire manufacturer's recommended psi and deflate (or inflate) the tires as necessary.

Note: Equal tire pressure is to be maintained at all times for performance purposes.

Lubrication

Gear Shaft

The gear (hex) shaft should be lubricated at least once a season or after every twenty-five (25) hours of operation.

1. Allow the engine to run until it is out of fuel. Do not attempt to pour fuel from the engine.
2. Carefully pivot the snow thrower up and forward so that it rests on the auger housing.
3. Remove the frame cover from the underside of the snow thrower by removing four self-tapping screws which secure it. Refer to Fig 6-2.

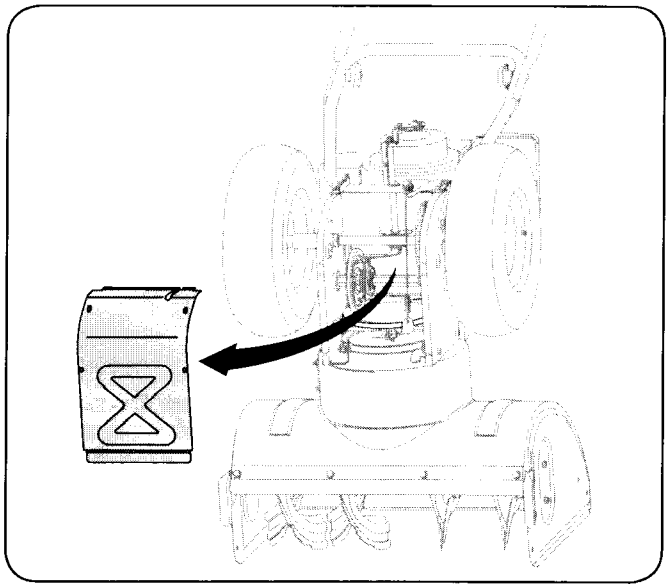

Figure 6-2

4. Apply a light coating of engine oil (or 3-in-1 oil) to the hex shaft. See Fig. 6-3.

   NOTE: When lubricating the hex shaft, be careful not to get any oil on the aluminum drive plate or the rubber friction wheel. Doing so will hinder the snow thrower's drive system. Wipe off any excess or spilled oil.

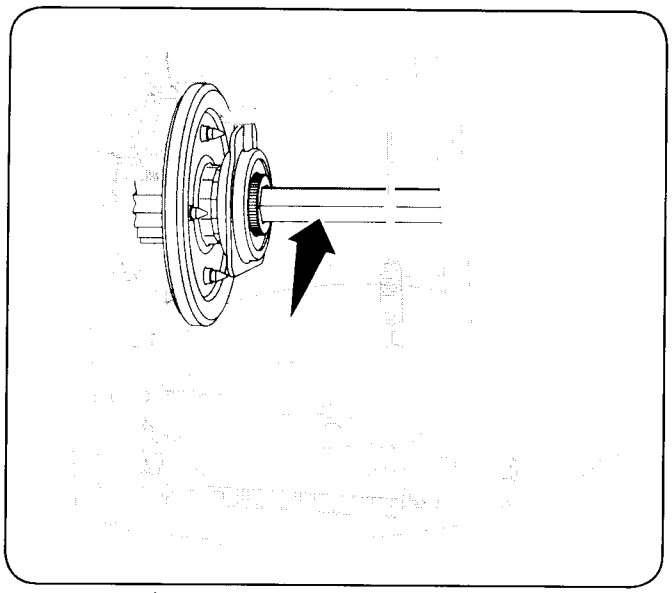

Figure 6-3

Wheels

At least once a season, remove both wheels. Clean and coat the axles with a multipurpose automotive grease before reinstalling wheels.

Auger Shaft

At least once a season, remove the shear pins from the auger shaft. Spray lubricant inside the shaft and around the spacers and the flange bearings found at either end of the shaft. See Fig. 6-4.

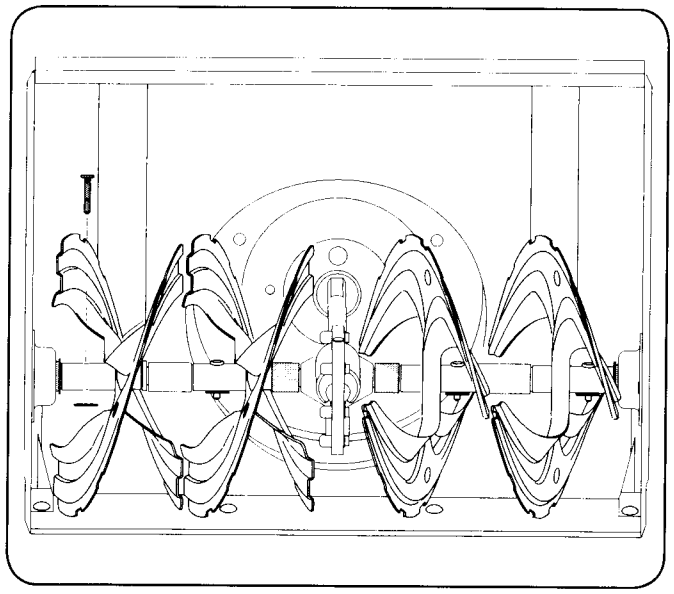

Figure 6-4

Adjustments

Shift Cable

If the full range of speeds (forward and reverse) cannot be achieved, refer to the figures to the right and adjust the shift cable as follows:

1. Place the shift lever in the fastest forward speed position.
2. Loosen the hex nut on the shift cable index bracket. See Fig. 6-5.

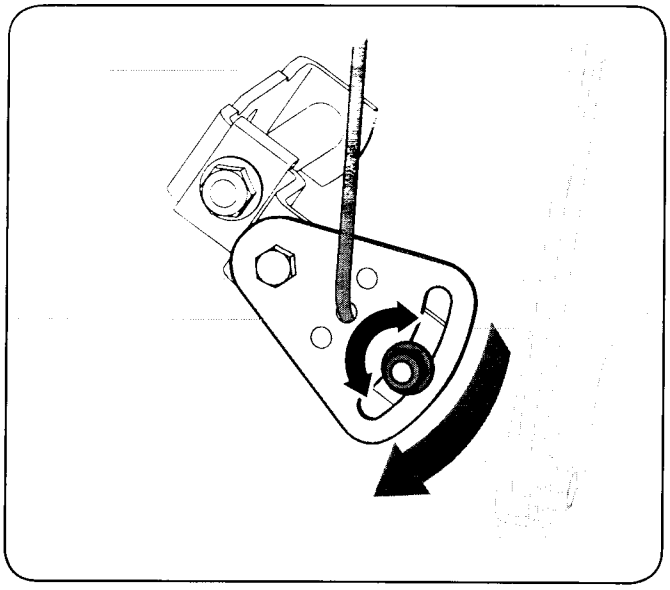

Figure 6-5

3. Pivot the bracket downward to take up slack in the cable.
4. Retighten the hex nut.

Auger Control

Refer to the Assembly and Set-up section for instructions on adjusting the auger control cable.

Chute Assembly

Refer to the Assembly and Set-up section for instructions on adjusting the chute assembly.

Skid Shoes

Refer to the Assembly and Set-up section for instructions on adjusting the skid shoes.

Drive Control

When the drive control is released and in the disengaged "up" position the cable should have very little slack. It should NOT be tight.

NOTE: If excessive slack is present in the drive cable or if the snow thrower's drive is disengaging intermittently during operation, the cable may be in need of adjustment.

Check the adjustment of the drive control as follows:

1. With the drive control released, push the snow thrower gently forward. The unit should roll freely.
2. Engage the drive control and gently attempt to push the snow thrower forward. The wheels should not turn. The unit should not roll freely.
3. With the drive control released, move the shift lever back and forth between the R2 position and the F6 position several times. There should be no resistance in the shift lever.
4. If any of the above tests failed, the drive cable is in need of adjustment. Proceed as follows:
5. Loosen the lower hex nut on the drive cable bracket. See Fig. 6-6.

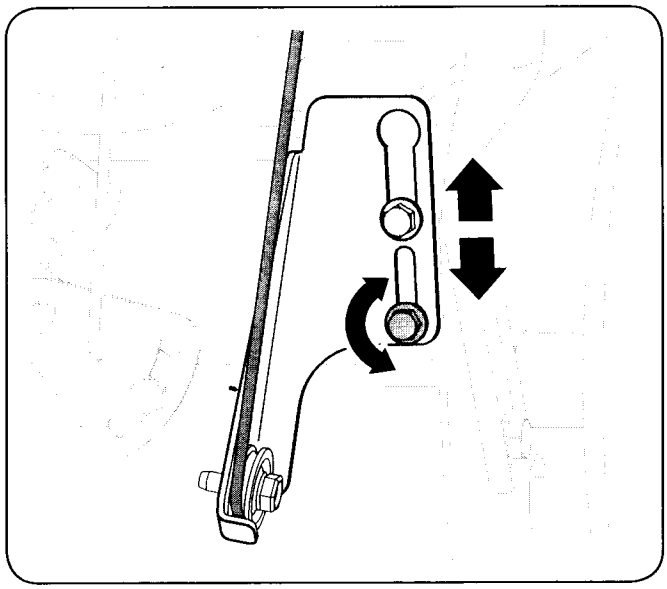

Figure 6-6

6. Position the bracket upward to provide more slack (or downward to increase cable tension).
7. Retighten the upper hex nut.
8. Repeat steps 1-4 to verify the drive control is working properly.

Chute Control Rod

To adjust the chute control rod, proceed as follows:

1. Remove the cotter pin from the hole closest to the chute assembly on the chute rotation assembly.
2. Pull out the chute control rod until the hole in it lines up with the second hole in the chute rotation assembly. See Fig. 6-6.

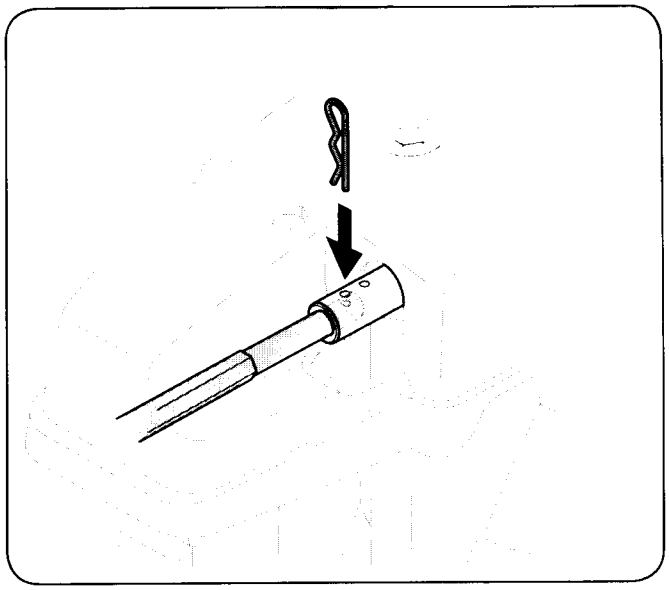

Figure 6-6

3. Reinsert the cotter pin through this hole and the chute control rod. See Fig. 6-6.

Off-Season Storage

If the snow thrower will not be used for 30 days or longer, follow the storage instructions below.

1. Remove all fuel from tank by running engine until it stops. Do not attempt to pour fuel from the engine.
2. Lubricate the machine as instructed earlier in this section.
3. Store in a clean, dry area.
4. If storing the snow thrower in an unventilated area, rustproof the machine using a light oil or silicone to coat the snow thrower.
5. Clean the exterior of the engine and the snow thrower.

NOTE: Refer to the Engine Maintenance section for information on storing your engine.

Engine Maintenance

7

WARNING! To prevent accidental start-up, shut off the engine and remove the key before performing any type of engine maintenance.

Periodic inspection and adjustment of the engine is essential if high level performance is to be maintained. Regular maintenance will also ensure a long service life. The required service intervals and the type of maintenance to be performed are described in the table below. Follow the hourly or calendar intervals, whichever occur first. More frequent service is required when operating in adverse conditions.

Maintenance Schedule

Tasks	First 5 Hrs.	Each Use or Every 5 Hrs.	Every Season or 25 Hrs.	Every Season or 50 Hrs.	Every Season or 100 Hrs.	Service Dates
Check engine oil		●				
Change engine oil	●			●		
Check spark plug			●			
Service spark plug					●	
Clean exhaust area		●				

Changing Engine Oil

NOTE: Check the oil level before each use and after every five hours of operation to be sure correct oil level is maintained. Refer to Checking Oil Level in the Operation section

1. Drain fuel from tank by running engine until the fuel tank is empty. Be sure fuel fill cap is secure.
2. Place suitable oil collection container under oil drain plug.
3. Remove oil drain plug, Figure 7-1.

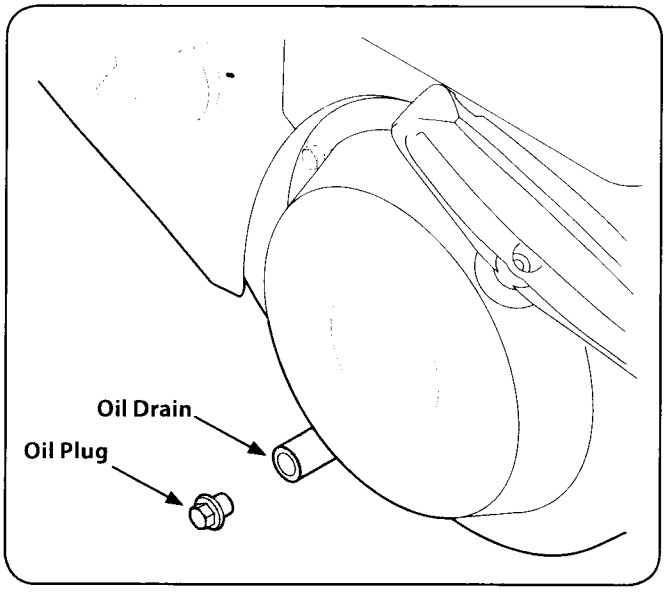

Figure 7-1

4. Tip engine to drain oil into the container. Used oil must be disposed of at a proper collection center.
5. Reinstall the drain plug and washer and tighten securely.
6. Refill with the recommended oil and check the oil level; refer to Operation section for instructions.
7. Reinstall the oil filler cap/dipstick securely.

CAUTION: Thoroughly wash your hands with soap and water as soon as possible after handling used oil.

NOTE: Please dispose of used motor oil in a manner that is friendly to the environment. Take it to a recycling center or other collection center.

Oil Recommendations

When adding oil to the engine, refer to viscosity chart below. Engine oil capacity is 600 ml (approx. 20 oz.). Do not over-fill. Use a 4-stroke, or an equivalent high detergent, premium quality motor oil certified to meet or exceed U.S. automobile manufacturer's requirements for service classification SG, SF. Motor oils classified SG, SF will show this designation on the container.

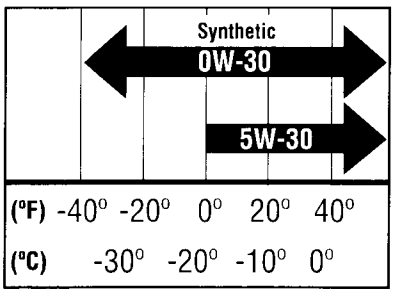

CAUTION: DO NOT use nondetergent oil or 2-stroke engine oil. It could shorten the engine's service life.

Spark Plug

WARNING! DO NOT check for spark with spark plug removed. DO NOT crank engine with spark plug removed.

WARNING! If the engine has been running, the muffler will be very hot. Be careful not to touch the muffler.

To ensure proper engine operation, the spark plug must be properly gapped and free of deposits.

1. Remove the spark plug boot and use a spark plug wrench to remove the plug, Figure 7-2.

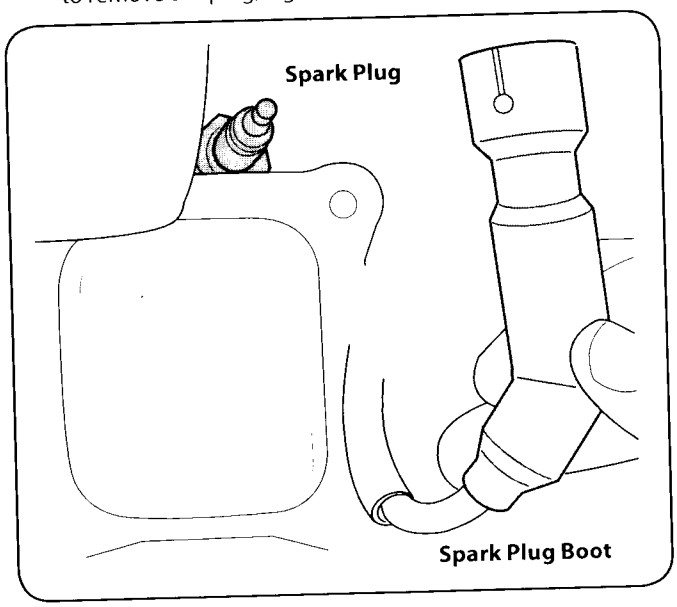

Figure 7-2

2. Visually inspect the spark plug. Discard the spark plug if there is apparent wear, or if the insulator is cracked or chipped. Clean the spark plug with a wire brush if it is to be reused.
3. Measure the plug gap with a feeler gauge. Correct as necessary by bending side electrode, Figure 7-3. The gap should be set to .02-.03 inches (0.60-0.80 mm).

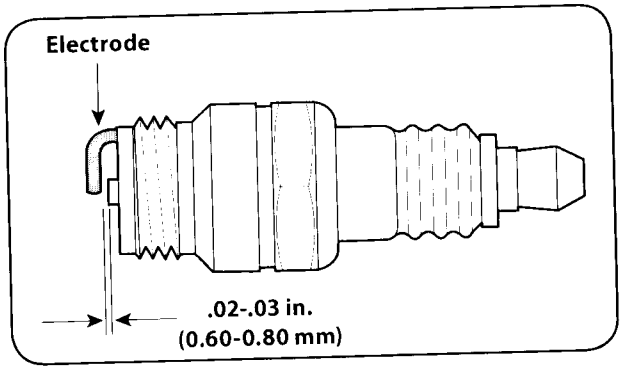

Figure 7-3

4. Check that the spark plug washer is in good condition and thread the spark plug in by hand to prevent cross-threading.
5. After the spark plug is seated, tighten with a spark plug wrench to compress the washer.

   NOTE: When installing a new spark plug, tighten ½-turn after the spark plug seats to compress the washer. When reinstalling a used spark plug tighten ⅛- to ¼-turn after the spark plug seats to compress the washer.

CAUTION! The spark plug must be tightened securely. A loose spark plug can become very hot and can damage the engine.

Cleaning the Engine

If the engine has been running, allow it to cool for at least half an hour before cleaning. Periodically remove dirt build-up from engine.

CAUTION! Do not spray engine with water to clean because water could contaminate fuel. Using a garden hose or pressure washing equipment can also force water into the muffler opening. Water that passes through the muffler can enter the cylinder, causing damage.

WARNING! Accumulation of debris around muffler could cause a fire. Inspect and clean before every use.

Off-Season Storage

Engines stored over 30 days need to be drained of fuel to prevent deterioration and gum from forming in the fuel system or on essential carburetor parts. If the gasoline in your engine deteriorates during storage, you may need to have the carburetor, and other fuel system components, serviced or replaced.

- Remove all fuel from tank by running engine until it stops. Do not attempt to pour fuel from the engine.
- Change the engine oil.
- Remove spark plug and pour approximately 1 oz. (30 ml) of clean engine oil into the cylinder. Pull the recoil starter several times to distribute the oil, and reinstall the spark plug.
- Clean debris from around engine, and under, around, and behind muffler. Apply a light film of oil on any areas that are susceptible to rust.
- Store in a clean, dry and well ventilated area away from any appliance that operates with a flame or pilot light, such as a furnace, water heater, or clothes dryer. Avoid any area with a spark producing electric motor, or where power tools are operated.
- If possible, avoid storage areas with high humidity.
- Keep the engine level in storage. Tilting can cause fuel or oil leakage.

Belt Replacement

Auger Belt

To remove and replace your snow thrower's auger belt, proceed as follows:

1. Allow the engine to run until it is out of fuel. Do not attempt to pour fuel from the engine.
2. Remove the plastic belt cover on the front of the engine by removing the two self-tapping screws. See Fig. 8-1.

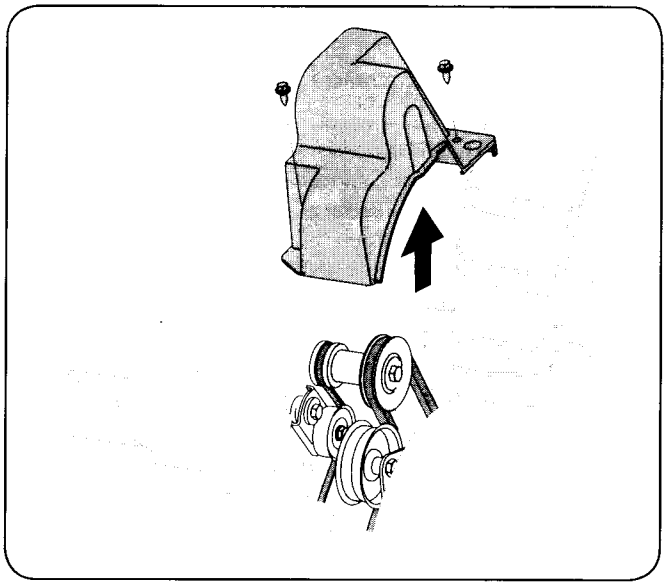

Figure 8-1

3. Roll the auger belt off the engine pulley. See Fig. 8-2.

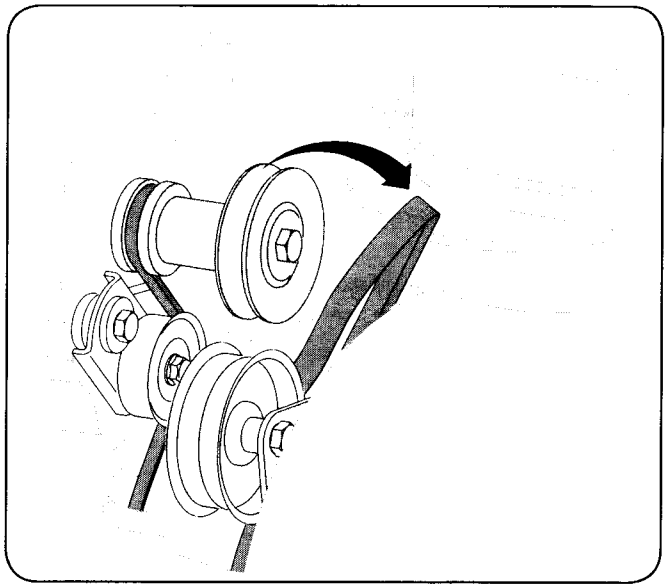

Figure 8-2

4. Carefully pivot the snow thrower up and forward so that it rests on the auger housing.
5. Remove the frame cover from the underside of the snow thrower by removing the self-tapping screws which secure it. See Fig. 8-3.

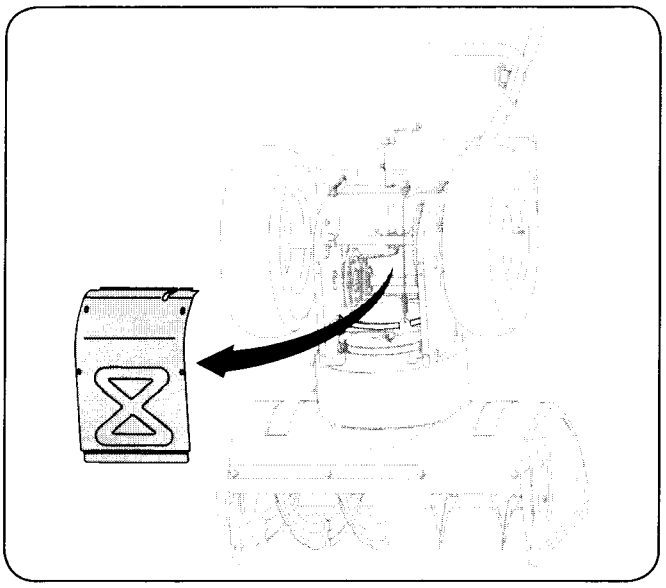

Figure 8-3

6. Remove the belt as follows. See Fig. 8-4.
   a. Loosen and remove the shoulder screw which acts as a belt keeper.
   b. Unhook the support bracket spring from the frame.

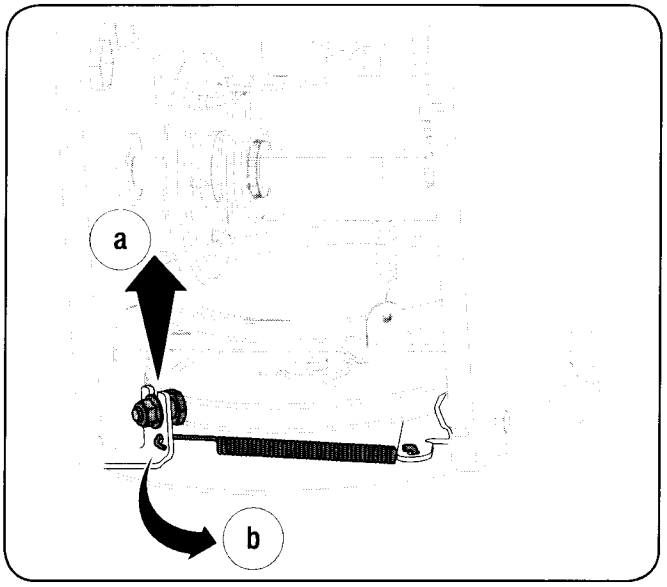

Figure 8-4

7. Remove the belt from around the auger pulley, and slip the belt between the support bracket and the auger pulley. See Fig. 8-5.

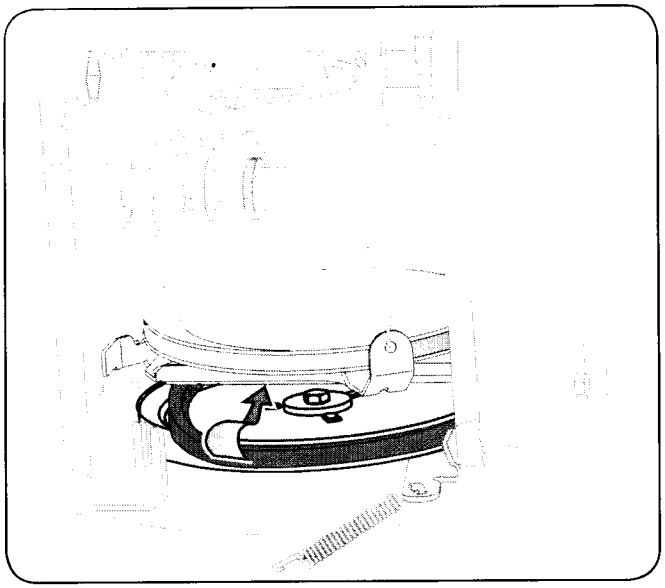

Figure 8-5

8. Replace the auger belt by following instructions in reverse order.

   NOTE: Do not forget to reinstall the shoulder screw and reconnect the spring to the frame after installing a replacement auger belt.

Drive Belt

To remove and replace your snow thrower's drive belt, proceed as follows:

1. To prevent spillage, remove all fuel from tank by running engine until it stops. Do not attempt to pour fuel from the engine.
2. Remove the plastic belt cover on the front of the engine by removing the two self-tapping screws. Refer to Fig. 8-1.
3. Remove the belt as follows. See Fig. 8-6
   a. Roll the auger belt off the engine pulley.
   b. Use a wrench to pivot the idler pulley toward the right.
   c. Lift the drive belt off engine pulley.

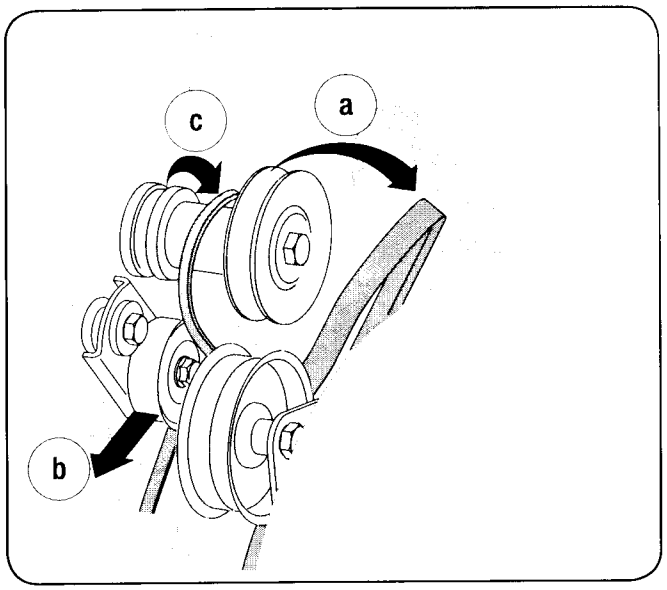

Figure 8-6

4. Carefully pivot the snow thrower up and forward so that it rests on the auger housing.
5. Remove the frame cover from the underside of the snow thrower by removing the self-tapping screws which secure it. Refer to Fig. 8-3.

6. Back out the stop bolt to increase the clearance between the friction wheel disc and friction wheel. See Fig. 8-7.

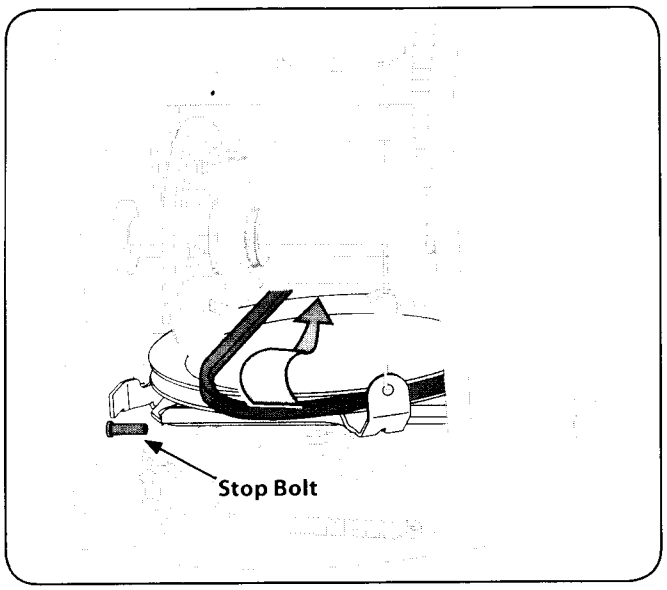

Figure 8-7

7. Slip the drive belt off the pulley and between friction wheel and friction wheel disc. See Fig. 8-7.
8. Remove and replace belt in the reverse order.

Friction Wheel Removal

If the snow thrower fails to drive with the drive control engaged and performing the drive control cable adjustment fails to correct the problem, the friction wheel may need to be replaced. Follow the instructions below. Examine the friction wheel for signs of wear or cracking and replace if necessary:

1. Allow the engine to run until it is out of fuel. Do not attempt to pour fuel from the engine.
2. Place the shift lever in third Forward (F3) position.
3. Carefully pivot the snow thrower up and forward so that it rests on the auger housing.
4. Remove the frame cover from the underside of the snow thrower by removing the self-tapping screws which secure it. Remove the right-hand wheel by removing the screw and bell washer which secure it to the axle. See Fig. 8-8.

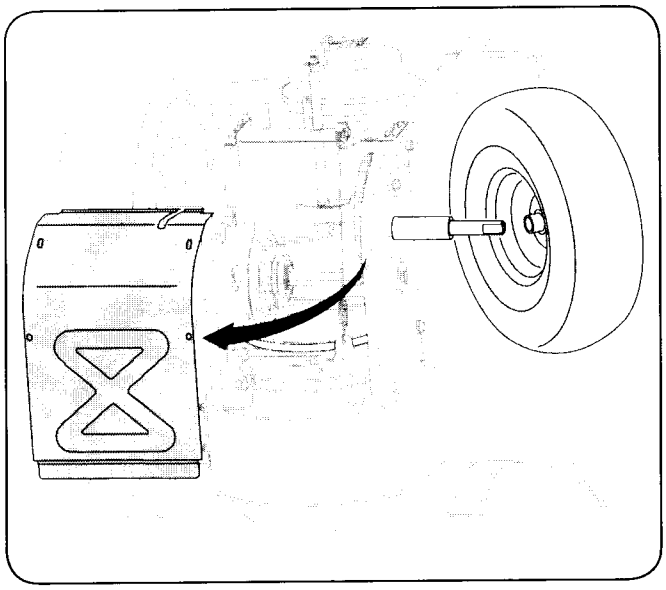

Figure 8-8

5. Carefully remove the hex nut which secures the hex shaft to the snow thrower frame and lightly tap the shaft's end to dislodge the ball bearing from the right side of the frame. See Fig. 8-9.

NOTE: Be careful not to damage the threads on the shaft.

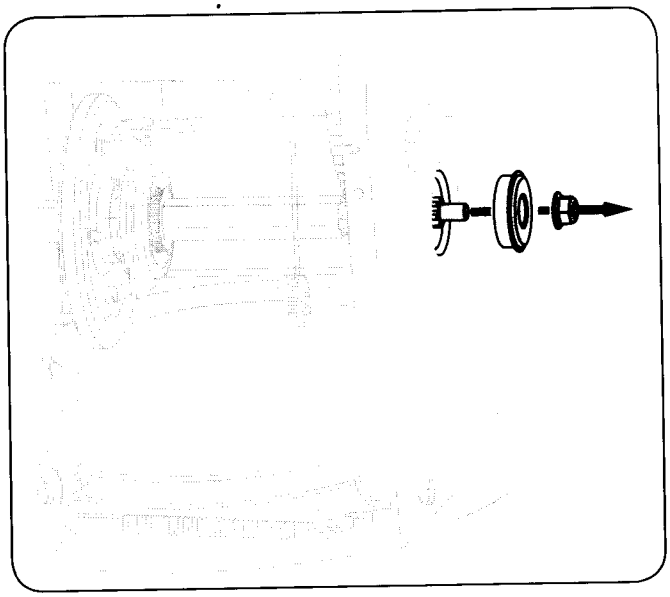

Figure 8-9

6. Carefully position the hex shaft downward and to the left before carefully sliding the friction wheel assembly off the shaft. See Fig. 8-10.

NOTE: If you're replacing the friction wheel assembly as a whole, discard the worn part and slide the new part onto the hex shaft.

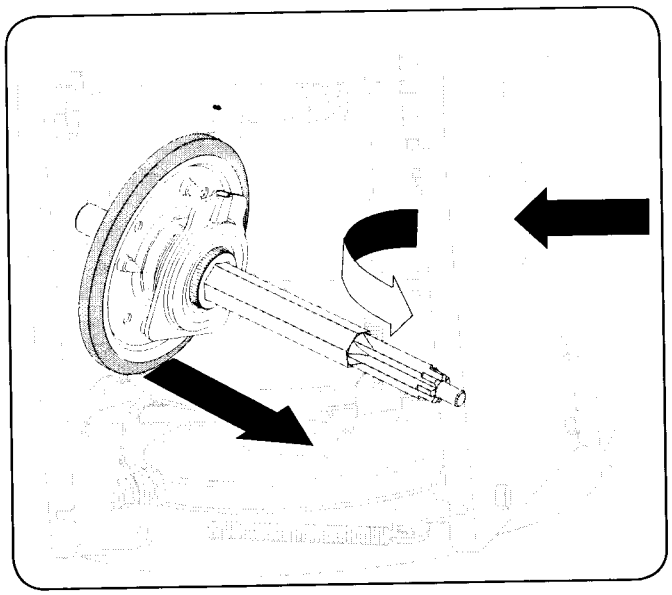

Figure 8-10

Follow the previous steps in reverse order to reassemble components. If you're disassembling the friction wheel and replacing only the rubber ring, proceed as follows:

1. Remove the four screws which secure the friction wheel's side plates together. See Fig. 8-11.

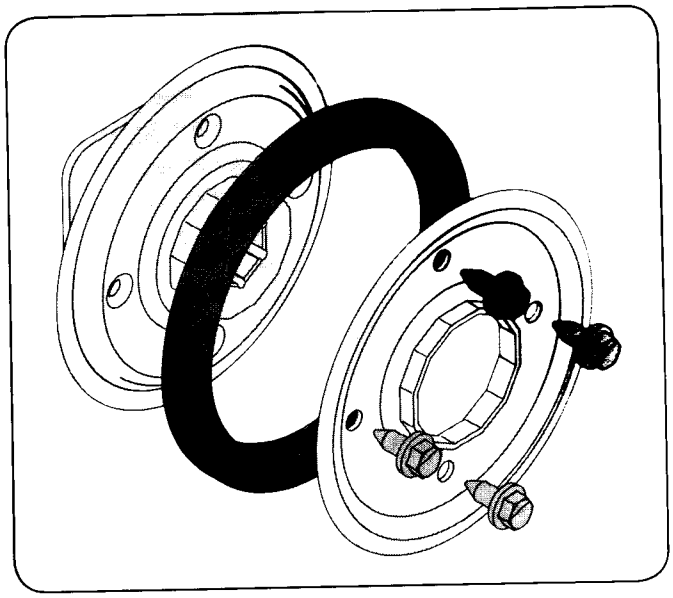

Figure 8-11

2. Remove the rubber ring from between the plates.
3. Reassemble the side plates with a new rubber ring.

   NOTE: When reassembling the friction wheel assembly, make sure that the rubber ring is centered and seated properly between the side plates. Tighten each screw only one rotation before turning the wheel clockwise and proceeding with the next screw. Repeat this process several times to ensure the plates are secured with equal force (between 6 ft-lbs and 9 ft-lbs).
4. Slide the friction wheel assembly back onto the hex shaft and follow the steps above in reverse order to reassemble components.

Troubleshooting

9

Problem	Cause	Remedy
Engine fails to start	1. Choke not in CHOKE position. 2. Spark plug wire disconnected. 3. Fuel tank empty or stale fuel. 4. Engine not primed. 5. Faulty spark plug. 6. Key not in ignition on engine.	1. Move choke to CHOKE position. 2. Connect wire to spark plug. 3. Fill tank with clean, fresh gasoline. 4. Prime engine as instructed in the Operation Section. 5. Clean, adjust gap, or replace. 6. Insert key fully into the switch.
Engine running erratically/ inconsistent RPM (hunting or surging)	1. Engine running on CHOKE. 2. Stale fuel. 3. Water or dirt in fuel system. 4. Carburetor out of adjustment. 5. Engine over-governed	1. Move choke lever to RUN position. 2. Fill tank with clean, fresh gasoline. 3. Drain fuel tank. Refill with fresh fuel. 4. Contact an authorized Service Center. 5. Contact an authorized Service Center.
Engine overheats	1. Carburetor not adjusted properly.	1. Contact an authorized Service Center.
Excessive vibration	1. Loose parts or damaged auger.	1. Stop engine immediately and disconnect spark plug wire. Tighten all bolts and nuts. If vibration continues, have unit serviced by an authorized Service Center.
Loss of power	1. Spark plug wire loose. 2. Gas cap vent hole plugged.	1. Connect and tighten spark plug wire. 2. Remove ice and snow from gas cap. Be certain vent hole is clear.
Unit fails to propel itself	1. Drive control cable in need of adjustment. 2. Drive belt loose or damaged. 3. Friction wheel worn.	1. Adjust drive control cable. Refer to Maintenance and Adjustments section. 2. Replace drive belt. Refer to Service section 3. Replace friction wheel. Refer to Service section.
Unit fails to discharge snow	1. Chute assembly clogged. 2. Foreign object lodged in auger. 3. Auger control cable in need of adjustment. 4. Auger belt loose or damaged. 5. Shear pin(s) sheared.	1. Stop engine immediately and disconnect spark plug wire. Clean chute assembly and inside of auger housing with clean-out tool or a stick. 2. Stop engine immediately and disconnect spark plug wire. Remove object from auger with clean-out tool or a stick. 3. Refer to Auger Control Test. 4. Refer to Maintenance section. 5. Replace with new shear pin(s).
Engine fails to start	1. Extension cord not connected (when using electric start button, on models so equipped)	1. Connect one end of the extension cord to the electric starter outlet and the other end to a three-prong 120-volt, grounded, AC outlet.
Chute fails to easily rotate 180 degrees	1. Chute assembled incorrectly.	1. Unassemble chute control and reassemble as directed in the Assembly section.

Replacement Parts

10

Component	Part Number and Description	
	929-0071	Extension Cord, 110V
	954-04050 954-0367	Auger Drive Belt Wheel Drive Belt
	684-04153 935-04054	Friction Wheel Assembly Friction Wheel Rubber
	725-1629	Lamp, 12V
	738-04124A 714-04040	Shear Pin, 1.50 Bow-tie Cotter Pin
	784-5580	Slide Shoe, Standard
	731-2643	Chute Clean-out Tool
	790-00121	Shave Plate, 26"
	731-05632	Key
	951-10292	Spark Plug

Phone (800) 828-5500 to order replacement parts or a complete Parts Manual (have your full model number and serial number ready). Parts Manual downloads are also available free of charge at www.troybilt.com.

Attachments & Accessories

11

The following attachments and accessories are available for your Storm 2620 snow thrower. Phone (800) 828-5500 for information regarding compatibility, price and availability (have your full model number and serial number ready).

Model Number	Description
753-05762A	Heated Grips
OEM-390-679	Drift Cutter Kit
OEM-390-674	Heavy Duty Snow Cab
490-241-0009	Light Kit
490-241-0010	Polymer Skid Shoe Kit

MTD CONSUMER GROUP INC (MTD), the California Air Resources Board (CARB) and the United States Environment Protection Agency (U. S. EPA)

Emission Control System Warranty Statement

(Owner's Defect Warranty Rights and Obligations)

EMISSION CONTROL SYSTEM COVERAGE IS APPLICABLE TO CERTIFIED ENGINES PURCHASED IN CALIFORNIA IN 2005 AND THEREAFTER AND ARE USED IN CALIFORNIA, AND TO CERTIFIED MODEL YEAR 2005 AND LATER ENGINES WHICH ARE PURCHASED AND USED ELSEWHERE IN THE UNITED STATES.

California and elsewhere in the United States Emission Control Defects Warranty Coverage

The California Air Resources Board (CARB), U. S. EPA and MTD are pleased to explain the emissions control system warranty on your model year 2005 and later small off-road engine. In California, new small off-road engines must be designed, built and equipped to meet the States anti-smog standards. Elsewhere in the United States, new non-road, spark-ignition engines certified for model 2005 and later, must meet similar standards set forth by the U. S. EPA. MTD must warranty the emission control system on your engine for the period of time listed below, provided there has been no abuse, neglect or improper maintenance of your small off-road engine.

Your emission control system may include parts such as the carburetor, fuel-injection system, the ignition system, and catalytic converter, fuel tanks, fuel lines, fuel caps, valves, canisters, filters, vapor hoses, clamps, connectors, and other associated emission-related components.

Where a warrantable condition exists, MTD will repair your small off-road engine at no cost to your including diagnosis, parts and labor.

MANUFACTURER'S WARRANTY COVERAGE:

This emissions control system is warranted for two years. If any emission-related part on your engine is defective, the part will be repaired or replaced by MTD.

OWNER'S WARRANTY RESPONSIBILITIES:

As the small off-road engine owner, you are responsible for the performance of the required maintenance listed in your Owner's Manual. MTD recommends that you retain all your receipts covering maintenances on your small off-road engine, but MTD can not deny warranty solely for the lack of receipts or for your failure to ensure the performance to all scheduled maintenance.

As the small off-road engine owner, you should however be aware that MTD may deny your warranty coverage if your small off-road engine or part has failed due to abuse, neglect, improper maintenance or unapproved modifications.

You are responsible for presenting your small off-road engine to an Authorized MTD Service Dealer as soon as a problem exists. The warranted repairs should be completed in a reasonable amount of time, not to exceed 30 days.

If you have any questions regarding your warranty rights and responsibilities, you should contact a MTD Service Representative at 1-800-800-7310 and address is MTD CONSUMER GROUP, P.O. Box 361131, Cleveland OH, 44136-0019.

DEFECTS WARRANTY REQUIREMENTS FOR 1995 AND LATER SMALL OFF-ROAD ENGINES:

This section applies to 1995 and later small off-road engines. The warranty period begins on the date the engine or equipment is delivered to an ultimate purchaser.

(a) General Emissions Warranty Coverage

MTD must warrant to the ultimate purchaser and each subsequent purchaser that the engine is:

(1) Designed, built, and equipped so as to conform with all applicable regulations adopted by the Air Resources Board pursuant to its authority in Chapters 1 and 2,Part 5, Division 26 of the Health and Safety Code; and

(2) Free from defects in materials and workmanship that cause the failure of a warranted part to be identical in all material respects to the part as described in the engine manufacturer's application for certification for a period of two years.

(b) The warranty on emissions-related parts will be interpreted as follows:

(1) Any warranted part that is not scheduled for replacement as required maintenance in the written instructions required by Subsection (c) must be warranted for the warranty period defined in Subsection (a)(2). If any such part fails during the period of warranty coverage, it must be repaired or replaced by MTD according to Subsection (4) below. Any such part repaired or replaced under the warranty must be warranted for the remaining warranty period.

(2) Any warranted part that is scheduled only for regular inspection in the written instructions required by Subsection (c) must be warranted for the warranty period defined in Subsection (a)(2). A statement in such written instructions to the effect of "repair or replace as necessary" will not reduce the period of warranty coverage. Any such part repaired or replaced under warranty must be warranted for the remaining warranty period.

(3) Any warranted part that which is scheduled for replacement as required maintenance in the written instructions required by Subsection (c) must be warranted for the period of time prior to the first scheduled replacement point for that part. If the part fails prior to the first scheduled replacement, the part must be repaired or replaced by MTD according to Subsection (4) below. Any such part repaired or replaced under warranty must be warranted for the remainder of the period prior to the first scheduled replacement point for the part.

(4) Repair or replacement of any warranted part under the warranty provisions of this article must be performed at no charge to the owner at a warranty station.

(5) Notwithstanding the provisions of Subsection (4) above, warranty services or repairs must be provided at all MTD distribution centers that are franchised to service the subject engines.

(6) The owner must not be charged for diagnostic labor that leads to the determination that a warranted part is in fact defective, provided that such diagnostic work is performed at a warranty station.

(7) The engine manufacturer is liable for damages to other engine components proximately caused by a failure under warranty of any warranted part.

(8) Throughout the engine's warranty period defined in Subsection (a)(2), MTD will maintain a supply of warranted parts sufficient to meet the expected demand for such parts.

(9) Any replacement part may be used in the performance of any warranty maintenance or repairs and must be provided without charge to the owner. Such use will not reduce the warranty obligations of MTD.

(10) Add-on or modified parts that are not exempted by the Air Resources Board may not be used. The use of any non-exempted add-on or modified parts shall be grounds for disallowing a warranty claim made in accordance with this article. The engine manufacturer shall not be liable under this article to warrant failures of warranted parts caused by the use of non-exempted add-on or modified part.

(c) MTD will include a copy of the following emission warranty parts list with each new engine, using those portions of the list applicable to the engine.

(1) Fuel Metering System

- Cold start enrichment system (soft choke)
- Carburetor and internal parts
- Fuel Pump
- Fuel Tank

(2) Air Induction System

- Air cleaner
- Intake manifold

(3) Ignition System

- Spark plug(s)
- Magneto Ignition System

(4) Exhaust System

- Catalytic converter
- SAI (Reed valve)

(5) Miscellaneous Items Used in Above System

- Vacuum, temperature , position, time sensitive valves and switches
- Connectors and assemblies

(6) Evaporative control

- Fuel Hose certified for ARB evaporative emission of 2006.
- Fuel Hose Clamps
- Tethered fuel cap
- Carbon canister
- Vapor lines

MANUFACTURER'S LIMITED WARRANTY FOR

TROY-BILT®

The limited warranty set forth below is given by Troy-Bilt LLC with respect to new merchandise purchased and used in the United States and/or its territories and possessions, and by MTD Products Limited with respect to new merchandise purchased and used in Canada and/or its territories and possessions (either entity respectively, "Troy-Bilt").

"Troy-Bilt" warrants this product (excluding its *Normal Wear Parts and Attachments* as described below) against defects in material and workmanship for a period of two (2) years commencing on the date of original purchase and will, at its option, repair or replace, free of charge, any part found to be defective in materials or workmanship. This limited warranty shall only apply if this product has been operated and maintained in accordance with the Operator's Manual furnished with the product, and has not been subject to misuse, abuse, commercial use, neglect, accident, improper maintenance, alteration, vandalism, theft, fire, water, or damage because of other peril or natural disaster. Damage resulting from the installation or use of any part, accessory or attachment not approved by Troy-Bilt for use with the product(s) covered by this manual will void your warranty as to any resulting damage.

Normal Wear Parts are warranted to be free from defects in material and workmanship for a period of thirty (30) days from the date of purchase. Normal wear parts include, but are not limited to items such as: batteries, belts, blades, blade adapters, tines, grass bags, wheels, rider deck wheels, seats, snow thrower skid shoes, friction wheels, shave plates, auger spiral rubber and tires.

Attachments — Troy-Bilt warrants attachments for this product against defects in material and workmanship for a period of one (1) year, commencing on the date of the attachment's original purchase or lease. Attachments include, but are not limited to items such as: grass collectors and mulch kits.

HOW TO OBTAIN SERVICE: Warranty service is available, WITH PROOF OF PURCHASE, through your local authorized service dealer. To locate the dealer in your area:

In the U.S.A.

Check your Yellow Pages, or contact Troy-Bilt LLC at P.O. Box 361131, Cleveland, Ohio 44136-0019, or call 1-866-840-6483, 1-330-558-7220 or log on to our Web site at www.troybilt.com.

In Canada

Contact MTD Products Limited, Kitchener, ON N2G 4J1, or call 1-800-668-1238 or log on to our Web site at www.mtdcanada.com.

This limited warranty does **not** provide coverage in the following cases:

a. Log splitter pumps, valves, and cylinders have a separate one-year warranty.

b. Routine maintenance items such as lubricants, filters, blade sharpening, tune-ups, brake adjustments, clutch adjustments, deck adjustments, and normal deterioration of the exterior finish due to use or exposure.

c. Service completed by someone other than an authorized service dealer.

d. Troy-Bilt does not extend any warranty for products sold or exported outside of the United States and/or Canada, and their respective possessions and territories, except those sold through Troy-Bilt's authorized channels of export distribution.

e. Replacement parts that are not genuine Troy-Bilt parts.

f. Transportation charges and service calls.

g. Troy-Bilt does not warrant this product for commercial use.

No implied warranty, including any implied warranty of merchantability of fitness for a particular purpose, applies after the applicable period of express written warranty above as to the parts as identified. No other express warranty, whether written or oral, except as mentioned above, given by any person or entity, including a dealer or retailer, with respect to any product, shall bind Troy-Bilt. During the period of the warranty, the exclusive remedy is repair or replacement of the product as set forth above.

The provisions as set forth in this warranty provide the sole and exclusive remedy arising from the sale. Troy-Bilt shall not be liable for incidental or consequential loss or damage including, without limitation, expenses incurred for substitute or replacement lawn care services or for rental expenses to temporarily replace a warranted product.

Some states do not allow the exclusion or limitation of incidental or consequential damages, or limitations on how long an implied warranty lasts, so the above exclusions or limitations may not apply to you.

In no event shall recovery of any kind be greater than the amount of the purchase price of the product sold. **Alteration of safety features of the product shall void this warranty.** You assume the risk and liability for loss, damage, or injury to you and your property and/or to others and their property arising out of the misuse or inability to use the product.

This limited warranty shall not extend to anyone other than the original purchaser or to the person for whom it was purchased as a gift.

HOW STATE LAW RELATES TO THIS WARRANTY: This limited warranty gives you specific legal rights, and you may also have other rights which vary from state to state.

IMPORTANT: Owner must present Original Proof of Purchase to obtain warranty coverage.

Troy-Bilt LLC, P.O. BOX 361131 CLEVELAND, OHIO 44136-0019; Phone: 1-866-840-6483, 1-330-558-7220
MTD Canada Limited - KITCHENER, ON N2G 4J1; Phone 1-800-668-1238

GDOC-100166 REV. A